Installation instructions, accessories

Volvo Car Corporation Gothenburg, Sweden

Instruction No	Version	Part. No.
31316527	1.5	31370000, 31316732, 31316517

Protective plate, beneath the engine

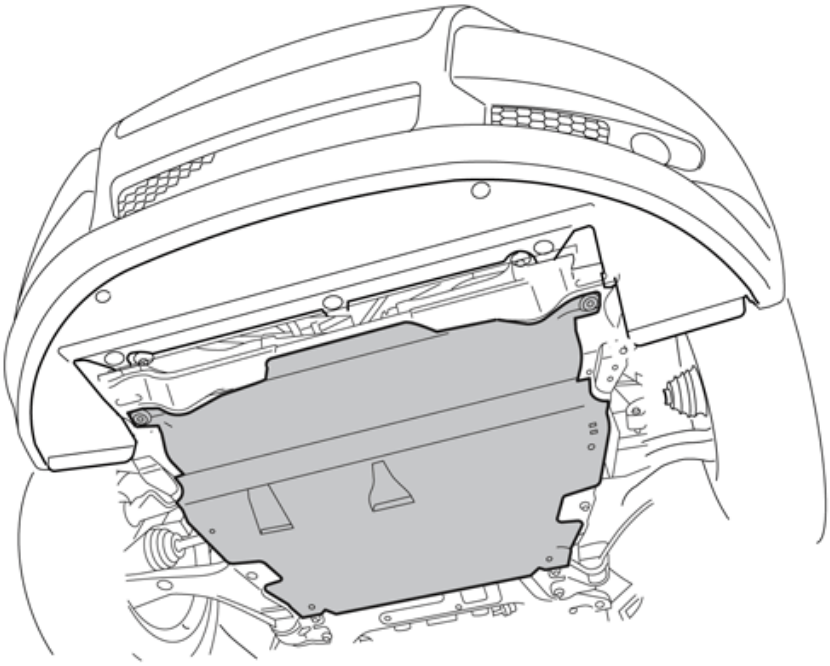

IMG-304503

Equipment

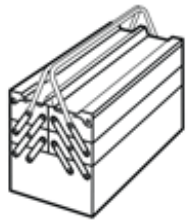

A0000162

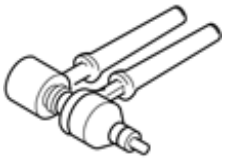

IMG-304663

IMG-239664

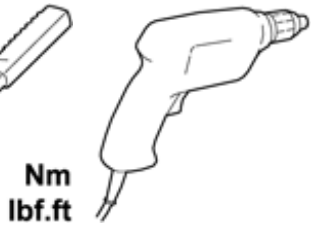

IMG-239660

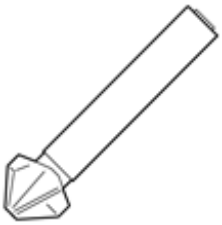

IMG-304523

© Volvo Car Corporation

Installation instructions, accessories

Volvo Car Corporation Gothenburg, Sweden

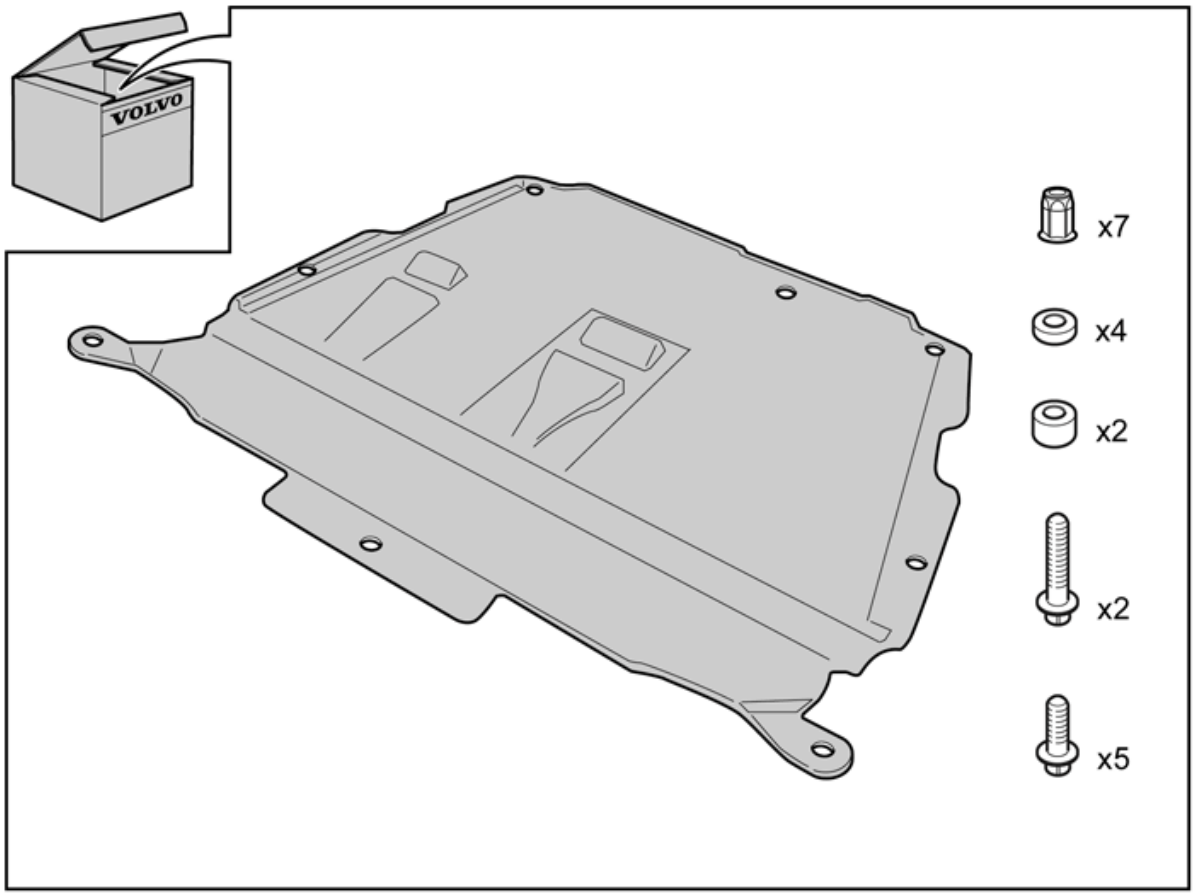

IMG-340412

INTRODUCTION

Read through all of the instructions before starting installation.

Notifications and warning texts are for your safety and to minimise the risk of something breaking during installation.

Ensure that all tools stated in the instructions are available before starting installation.

Certain steps in the instructions are only presented in the form of images. Explanatory text is also given for more complicated steps.

In the event of any problems with the instructions or the accessory, contact your local Volvo dealer.

1

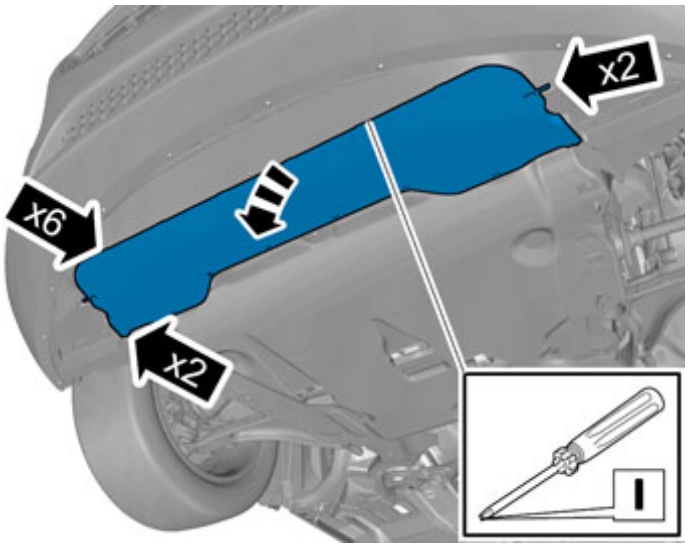

IMG-340317

Applies to the S60(11-)

Remove air baffle.

2

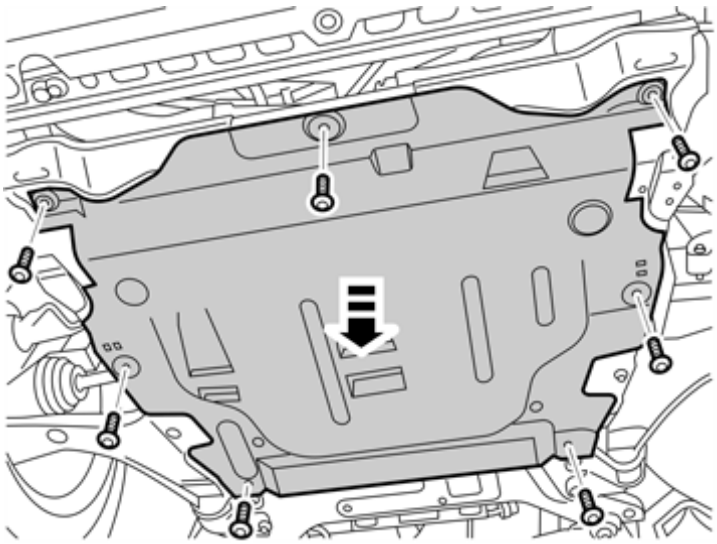

IMG-231309

Applies to all models

Remove the screws and the engine splash guard.

Place everything to one side. New material can be found in the kit.

3

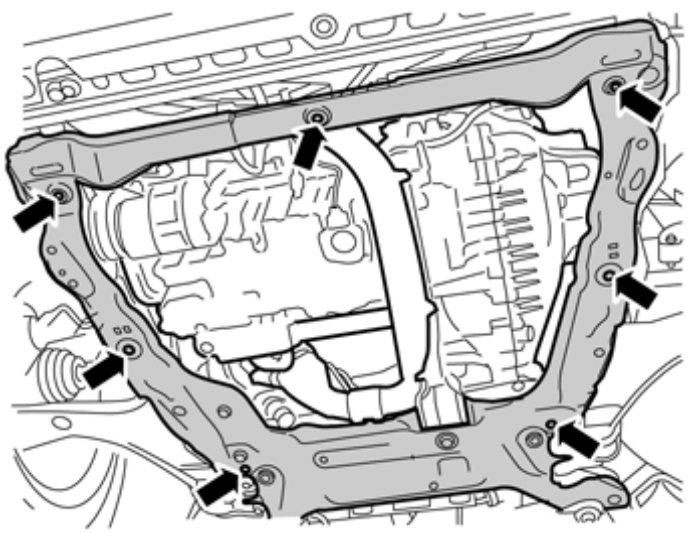

IMG-304563

Remove the clips for the protective plate mounting in the subframe.

Place the clips to one side. New ones can be found in the kit.

4

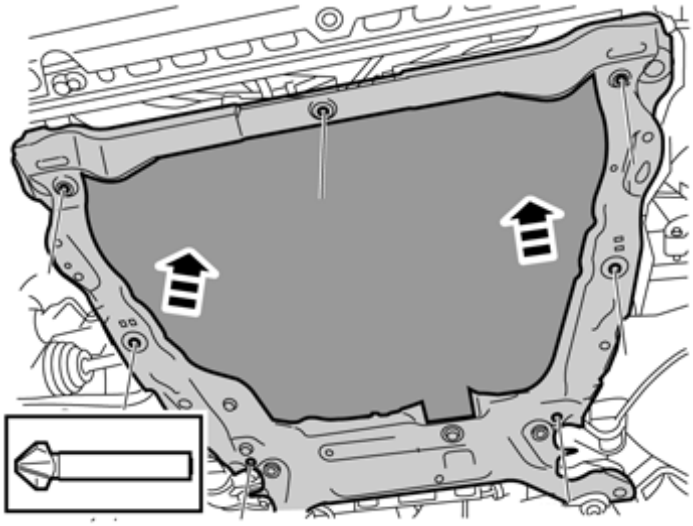

IMG-304564

Cover the underneath of the engine with cardboard or similar, so that drilling swarf does not blow up into the engine compartment.

Carefully drill out the rectangular holes where the clips were located. Use tool P/N 9814112.

Remove any swarf.

5

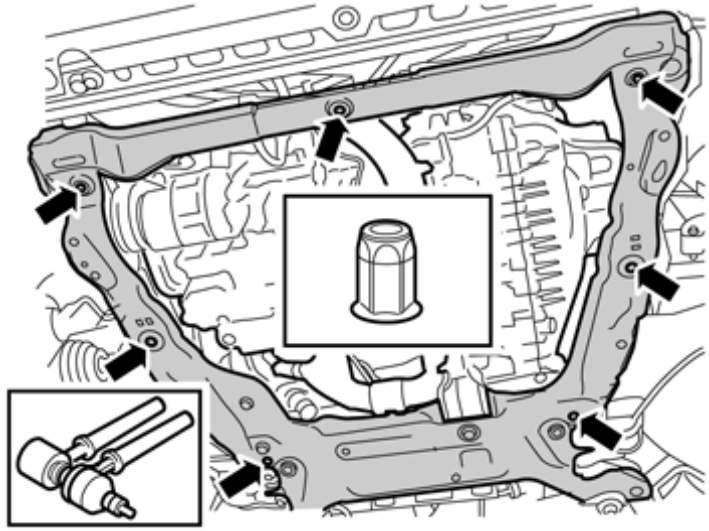

IMG-304565

Take the rivet nuts from the kit and tighten in the drilled holes. Use tool P/N 9512782.

6

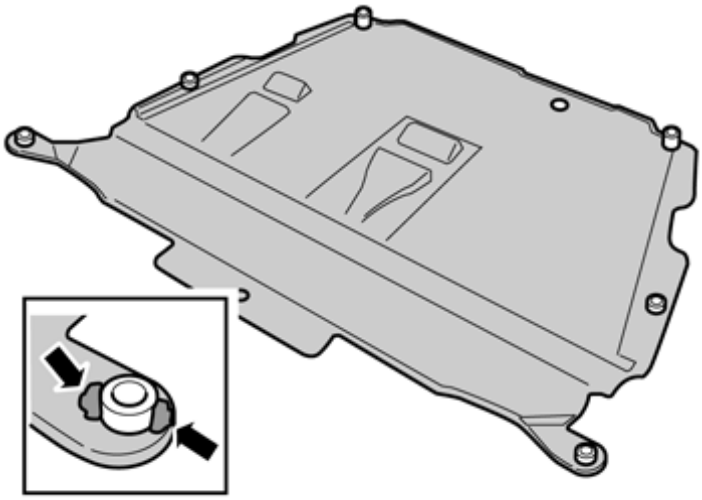

IMG-304583

Take the new protective plate with screws and spacers from the kit.

Position the protective plate so that the high spacers with the longer screws are at the back, and the four low spacers with the shorter screws at the sides are at the front.

Secure the spacers on the protective plate opposite the holes using pieces of butyl tape.

7

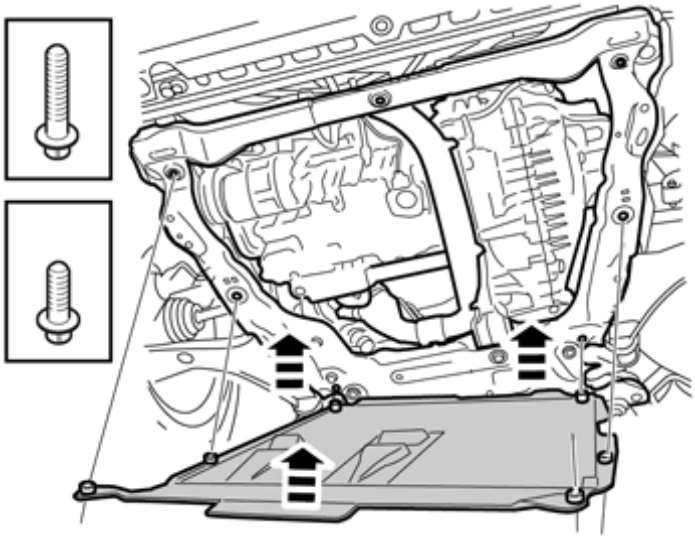

IMG-340413

Note!

Get help from a colleague for this procedure.

Lift the protective plate into position.

Install the screws. Position the long screws are the back. Tighten them to 30 Nm (22 lbf.ft.).

Slacken the screws two turns.

Tighten the screws. Tighten to 24 Nm (18 lbf. ft.).

8

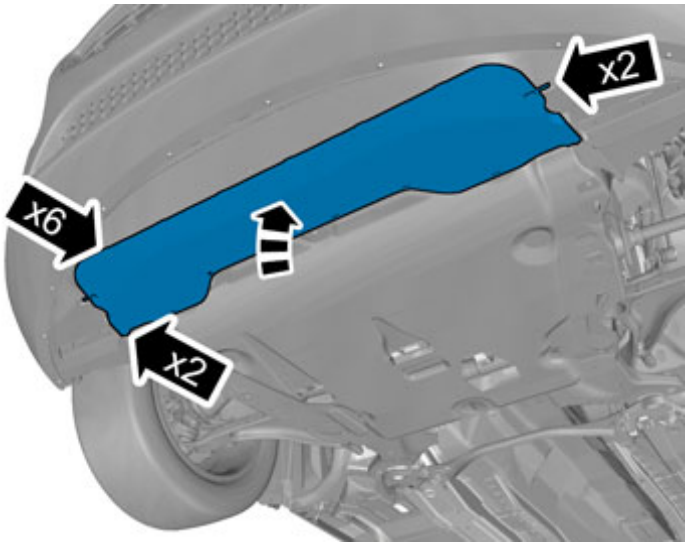

IMG-340318

Applies to the S60(11-)