Installation instructions, accessories

Volvo Car Corporation Gothenburg, Sweden

Instruction No	Version	Part. No.
31213740	1.4	30779760, 30779759

Mudflaps

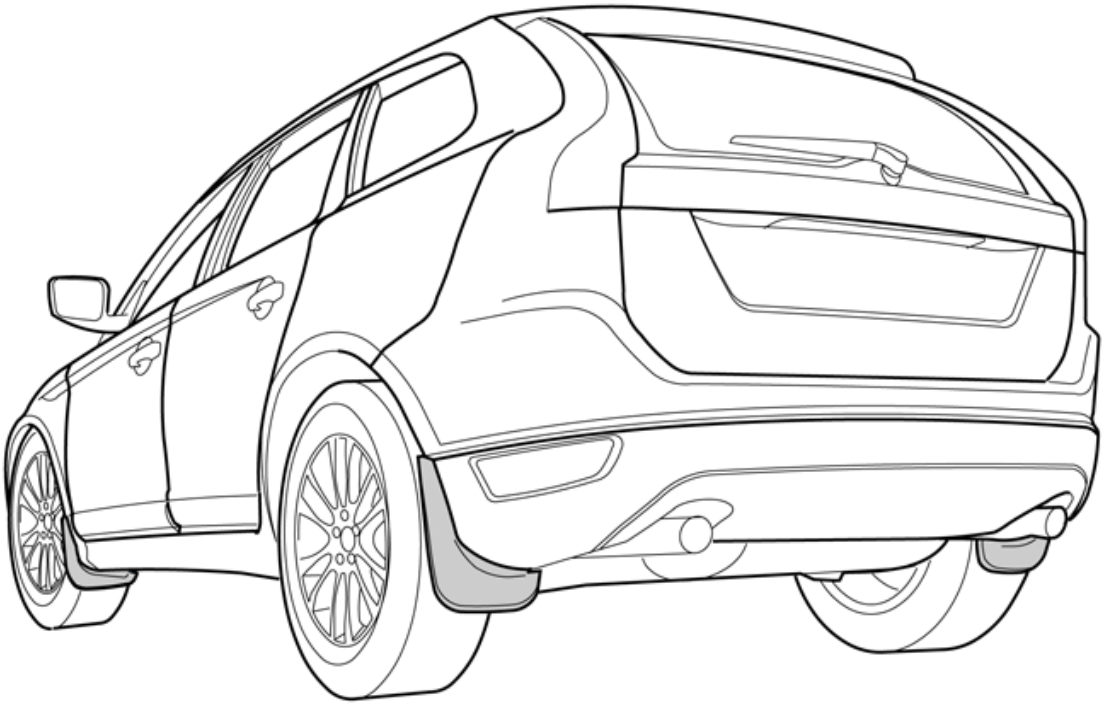

IMG-281763

Equipment

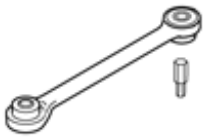

IMG-268803

IMG-239660

© Volvo Car Corporation

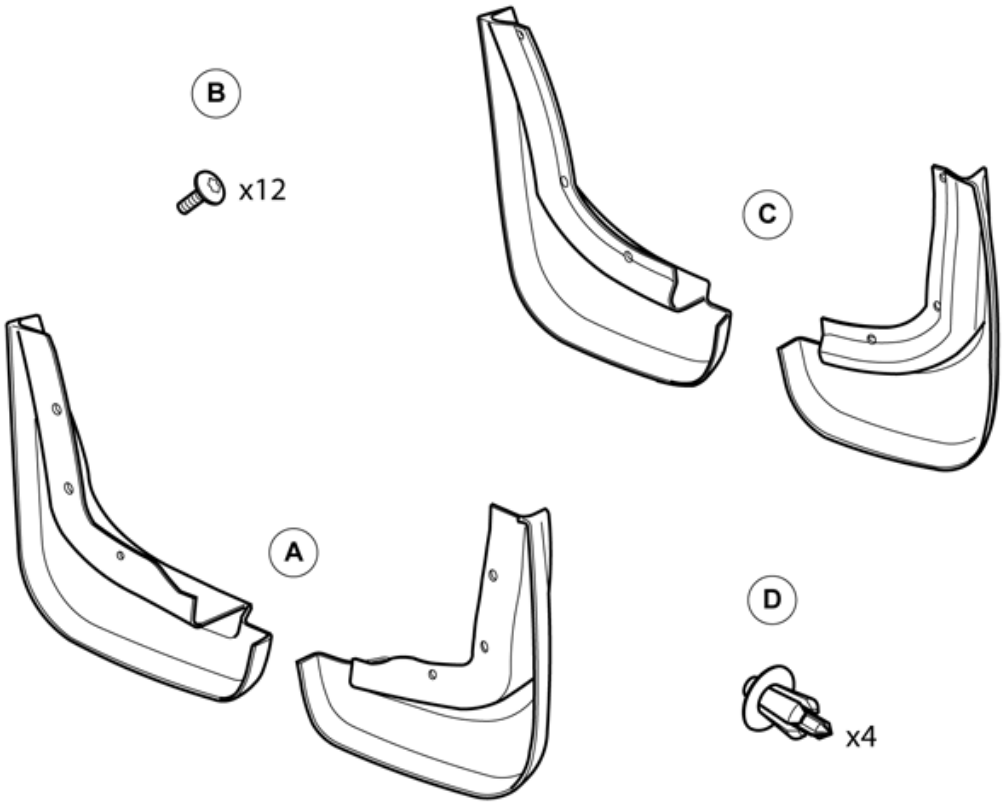

IMG-281764

Any comments on this publication? Please contact your nearest retailer. Thank You!

Publ.no:	Issue:	Kit no:

Comments:.....

.....

.....

.....

From:	
Address:	
Telephone:	
Telefax:	

IMG-213320

INTRODUCTION

Read through all of the instructions before starting installation.

Notifications and warning texts are for your safety and to minimise the risk of something breaking during installation.

Ensure that all tools stated in the instructions are available before starting installation.

Certain steps in the instructions are only presented in the form of images. Explanatory text is also given for more complicated steps.

In the event of any problems with the instructions or the accessory, contact your local Volvo dealer.

1

Installation of front mudflaps

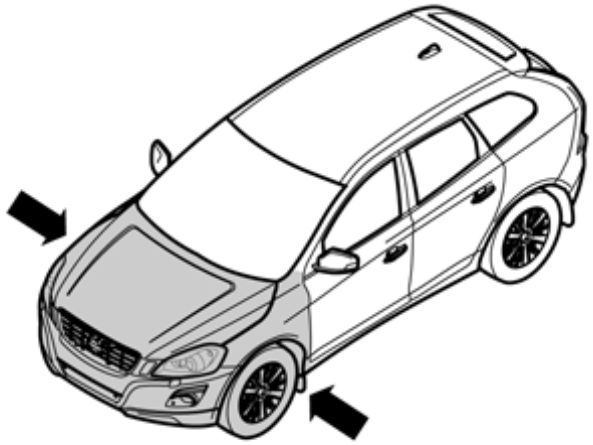

IMG-285504

2

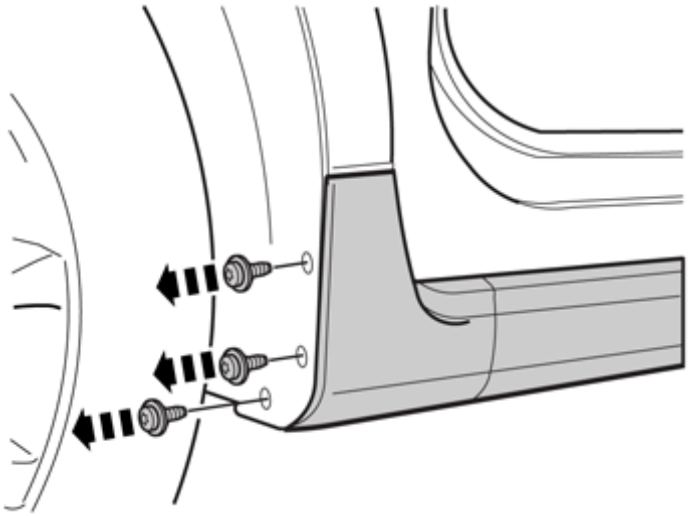

IMG-285505

3

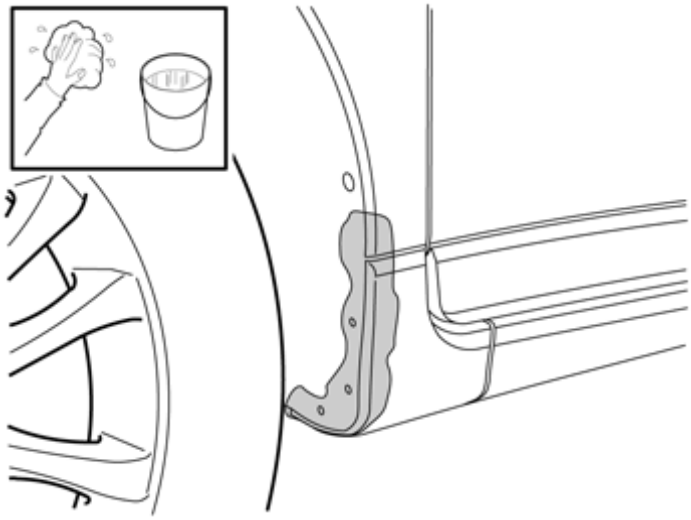

IMG-285507

4

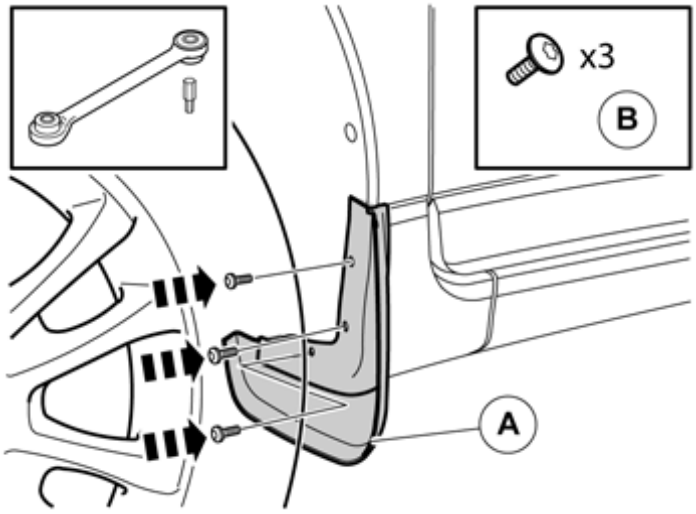

IMG-285510

5

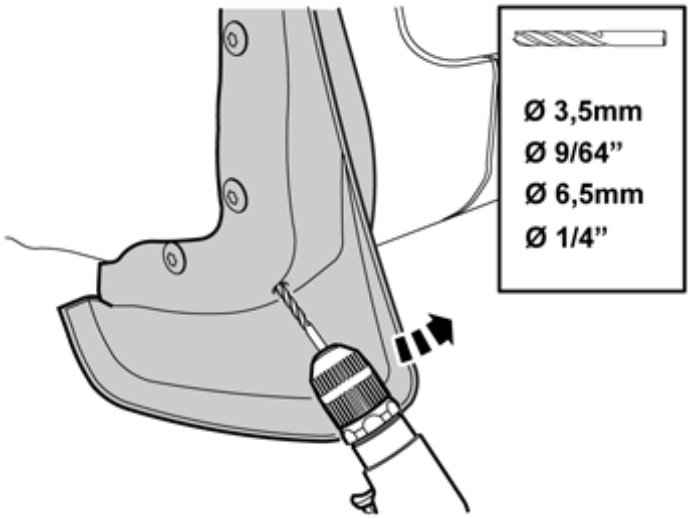

IMG-290443

Bend the mudflap backwards and drill a 3.5 mm (9/64") hole in the marking underneath.

Drill out the hole using a 6.5 mm (1/4") drill bit.

Clean the hole edges.

6

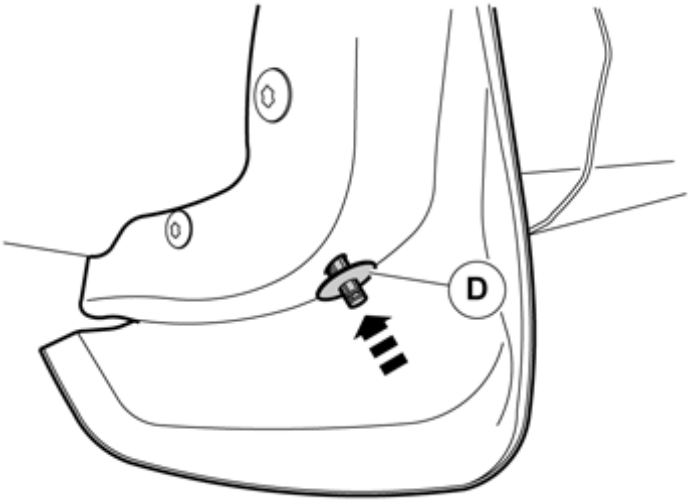

IMG-290444

Take a clip from the kit and press into the hole.

7

Installation of rear mudflaps

IMG-281783

8

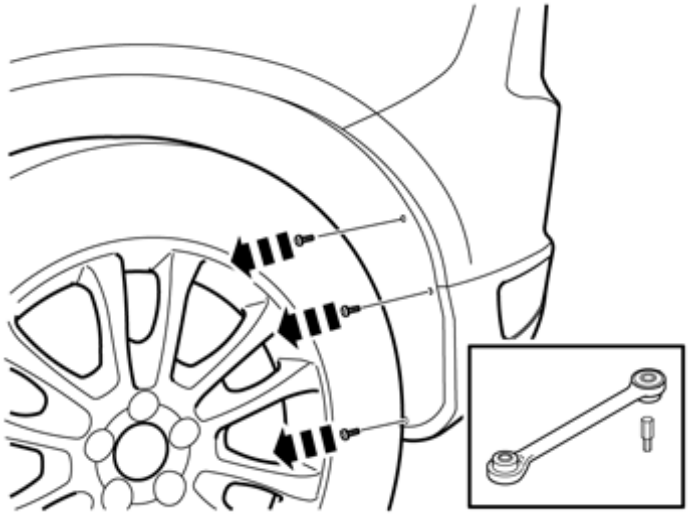

IMG-281766

9

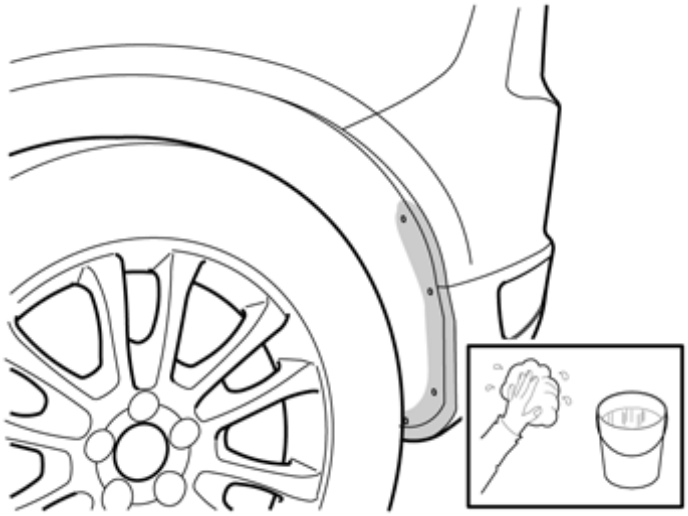

IMG-281767

10

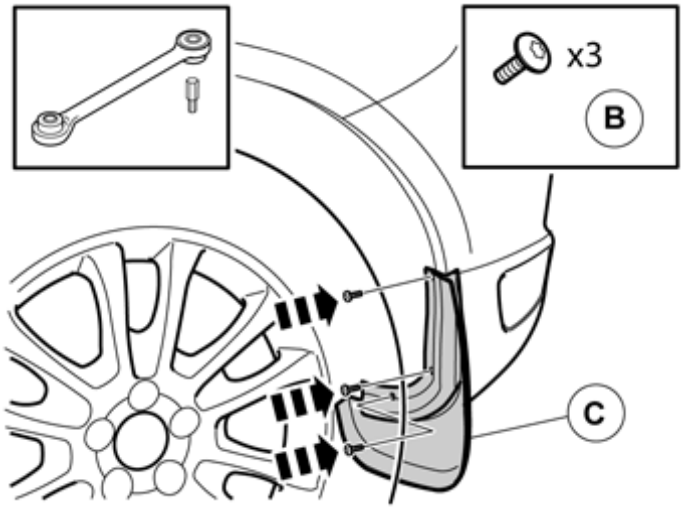

IMG-281768

11

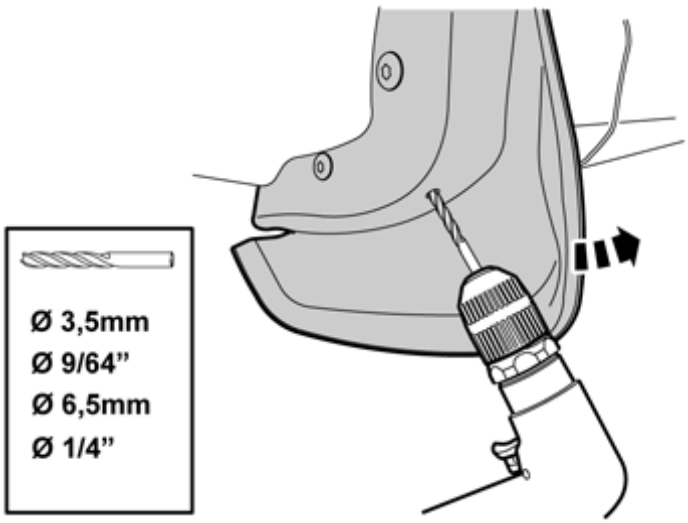

IMG-290445

Bend the mudflap backwards and drill a 3.5 mm (9/64") hole in the marking underneath.

Drill out the hole using a 6.5 mm (1/4") drill bit.

Clean the hole edges.

12

IMG-290446

Take a clip from the kit and pull out the central pin.

13

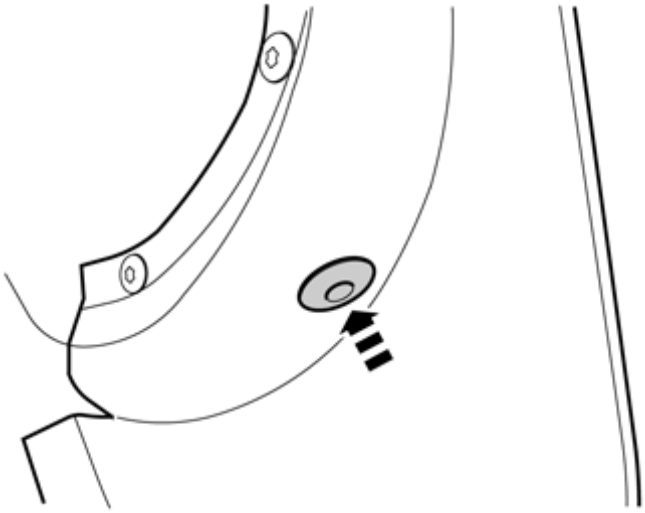

IMG-290447

Press the clip into the hole.

14

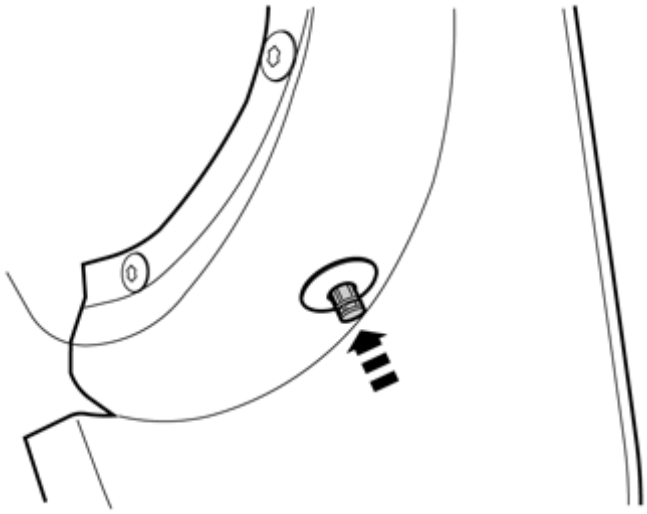

IMG-290449

Press the central pin into the clip.

© Volvo Car Corporation