Installation instructions, accessories

Volvo Car Corporation Gothenburg, Sweden

Instruction No	Version	Part. No.
31317739	1.0	31470776, 31470775, 31317622, 31317623, 31317620, 31317621

Metal pedals

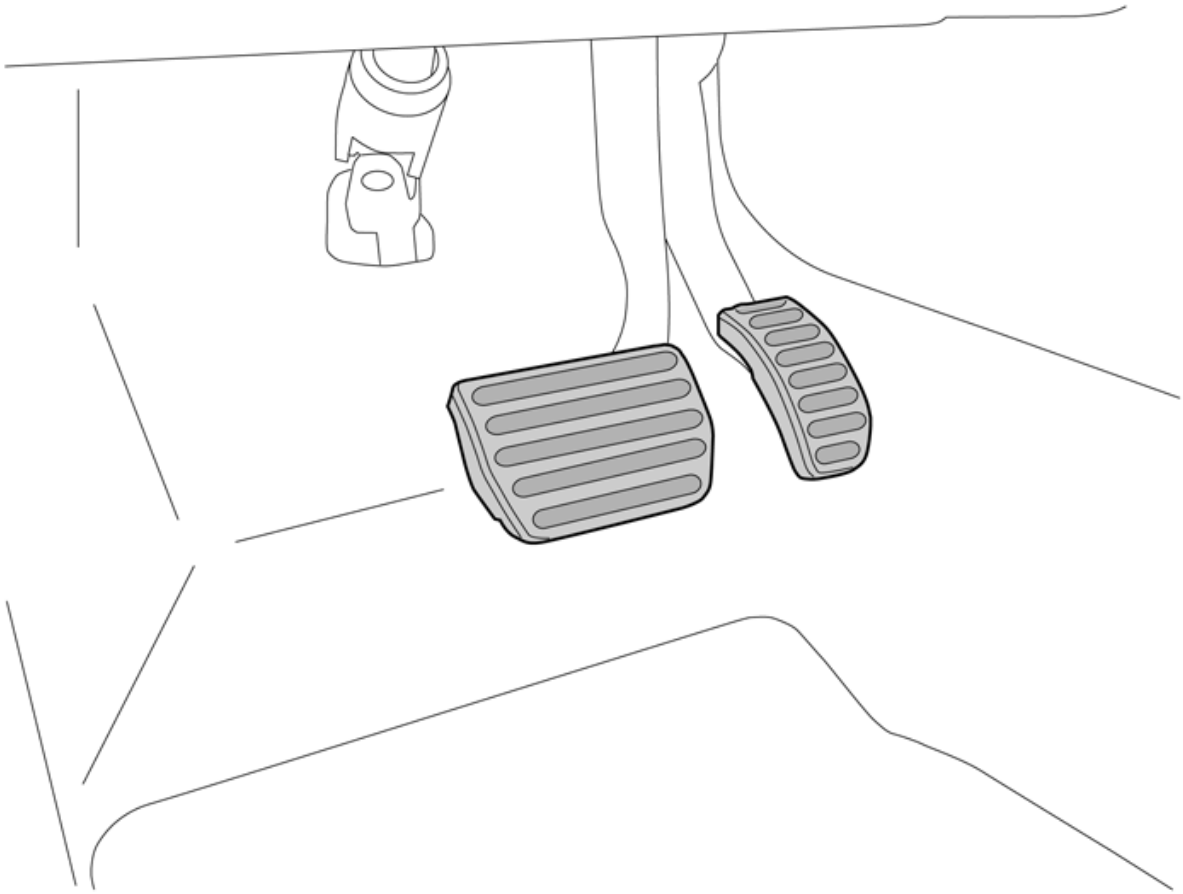

IMG-309463

Equipment

IMG-309504

IMG-239667

© Volvo Car Corporation

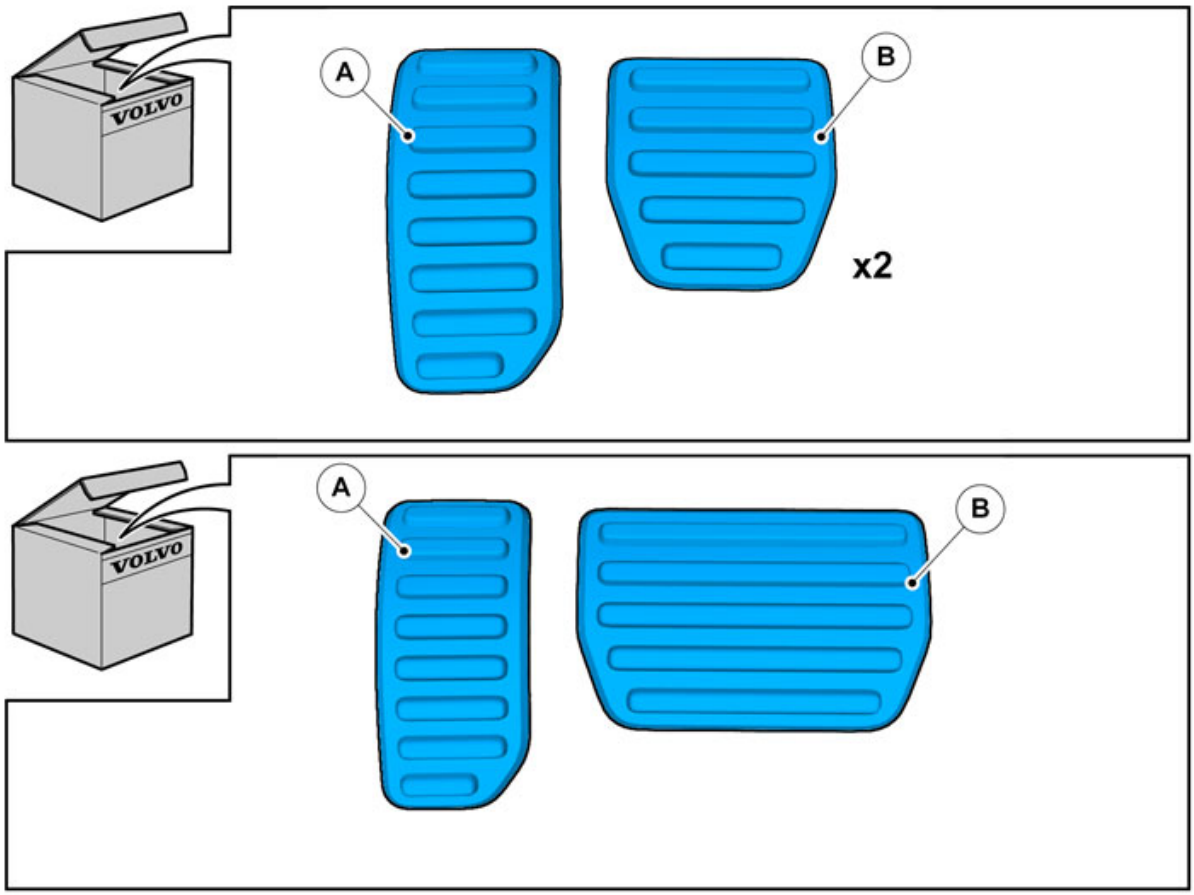

IMG-339849

INTRODUCTION

Read through all of the instructions before starting installation.

Notifications and warning texts are for your safety and to minimise the risk of something breaking during installation.

Ensure that all tools stated in the instructions are available before starting installation.

Certain steps in the instructions are only presented in the form of images. Explanatory text is also given for more complicated steps.

In the event of any problems with the instructions or the accessory, contact your local Volvo dealer.

1

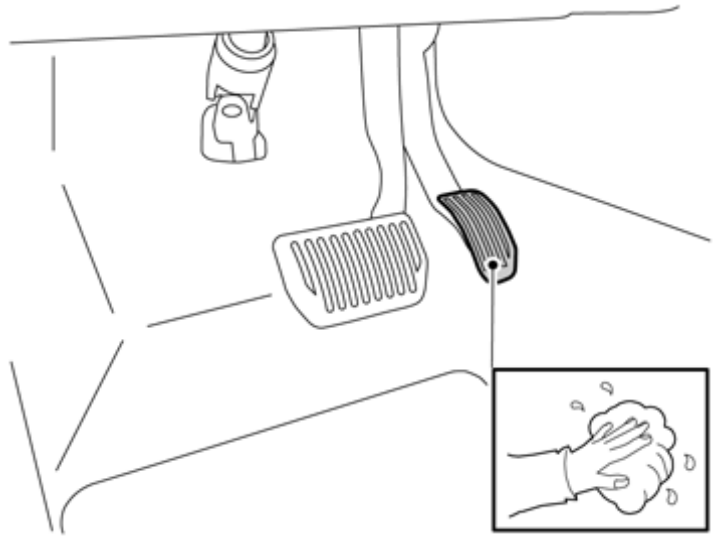

IMG-309523

Clean the surface.

2

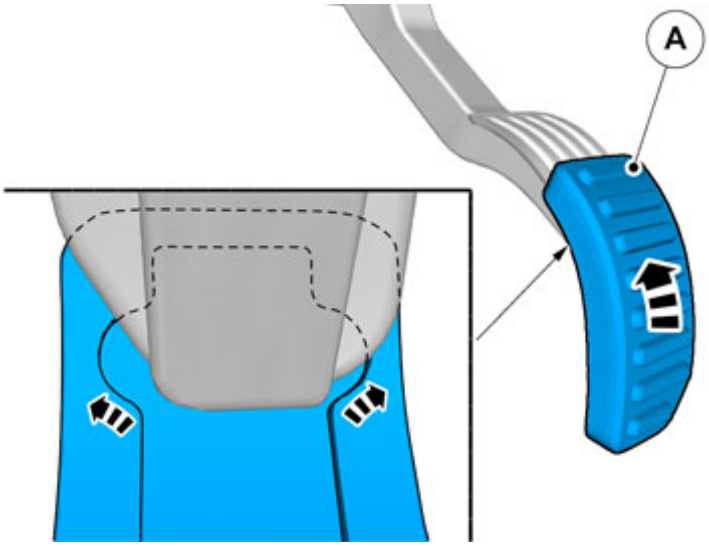

IMG-339850

3

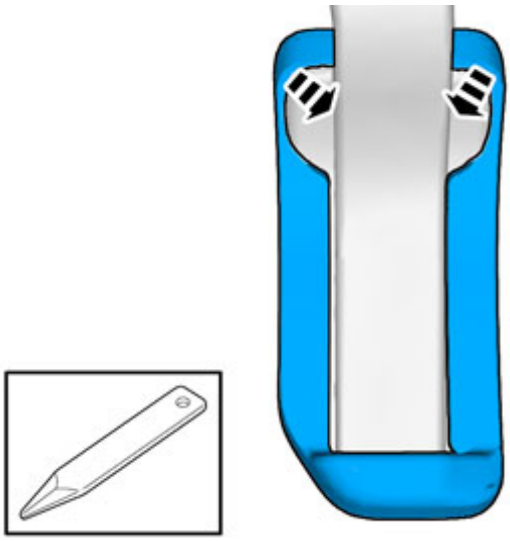

IMG-339851

4

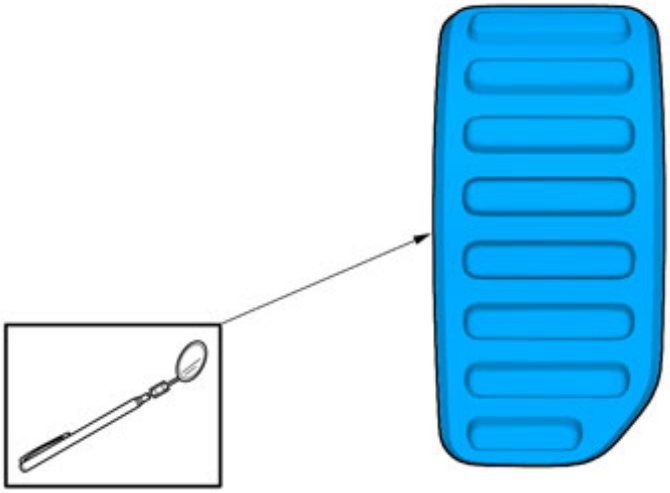

IMG-339852

Caution!

Using a mirror, check that the profiles of the protector are around the edges of the pedal.

5

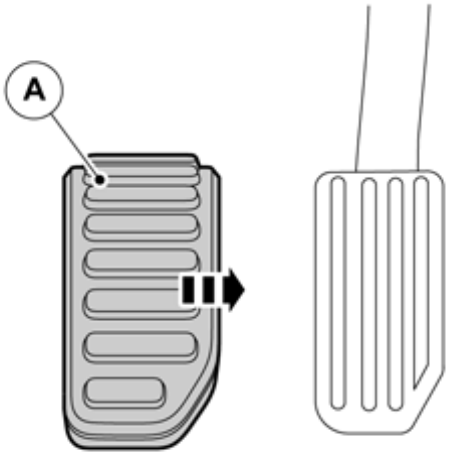

IMG-309623

Applies to right-hand drive vehicles

Hook the cover onto the long side of the accelerator pedal.

6

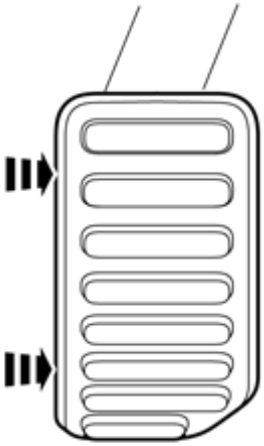

IMG-309643

Press the protector towards the pedal.

7

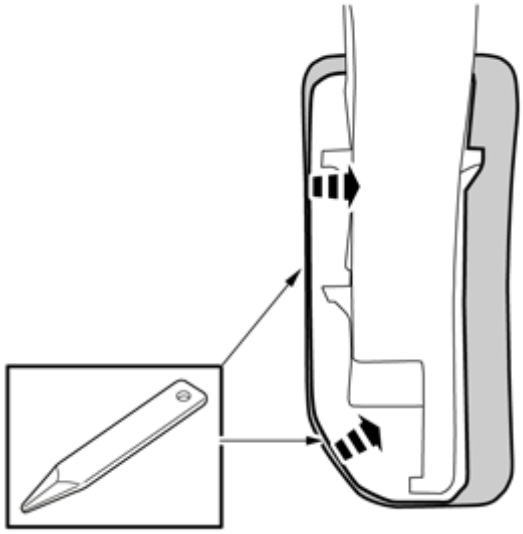

IMG-309664

8

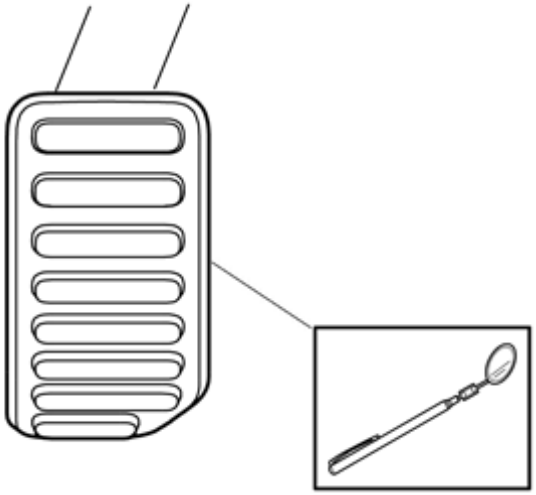

IMG-339853

Caution!

Using a mirror, check that the profiles of the protector are around the pedal.

9

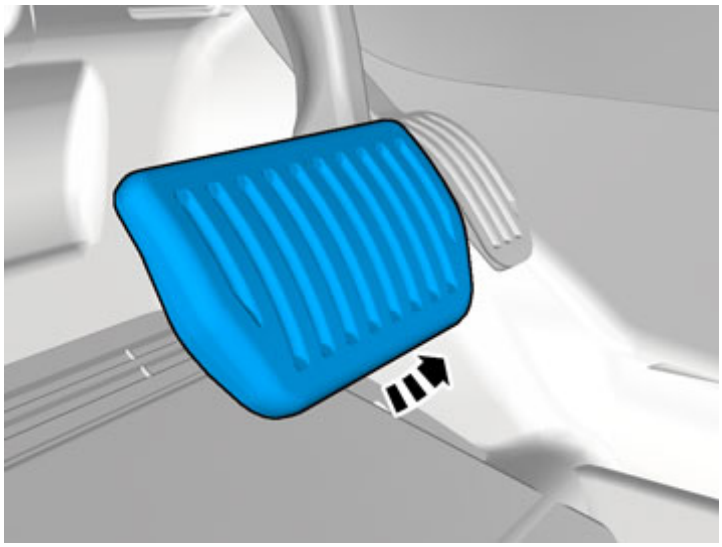

IMG-339856

Applies to cars with an automatic transmission

Note!

The component(s) must not be reused.

10

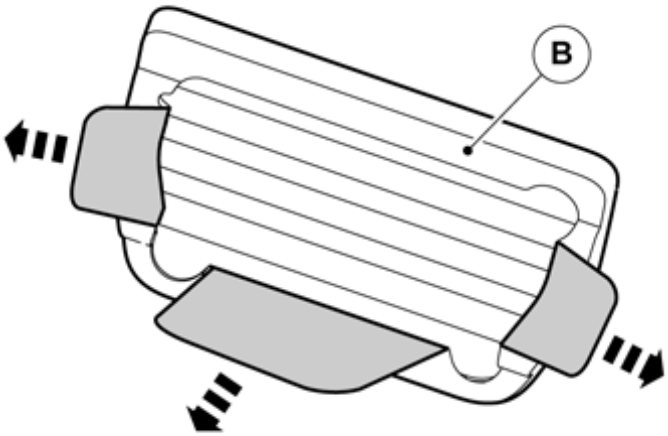

IMG-309843

Hold the pedal protector as illustrated and fold out the three tabs.

11

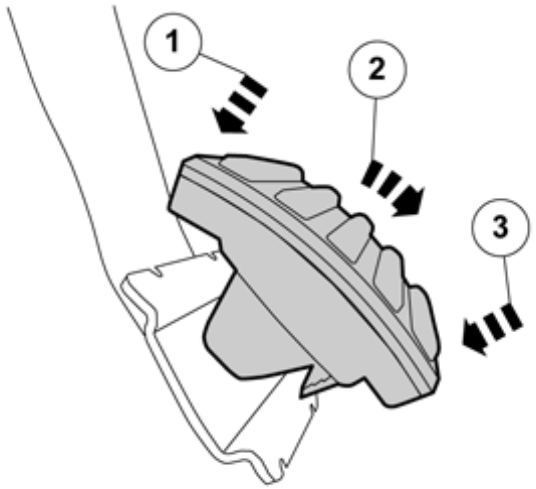

IMG-309844

Hook the protector on at the upper edge, at the same time hold the tabs and pull downwards.

Press the protector firmly onto the pedal.

12

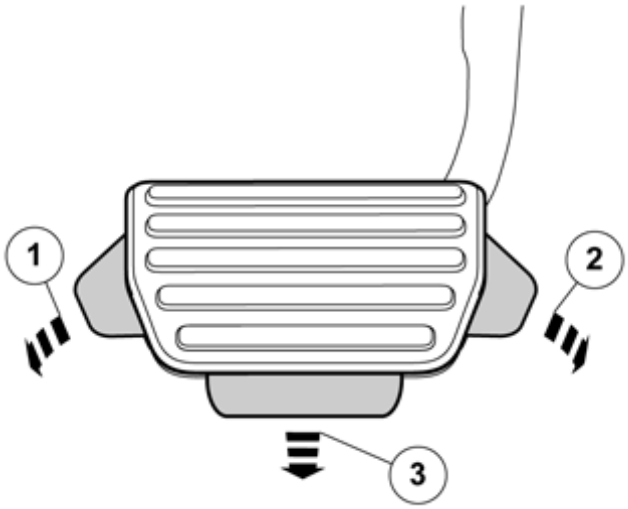

IMG-309863

13

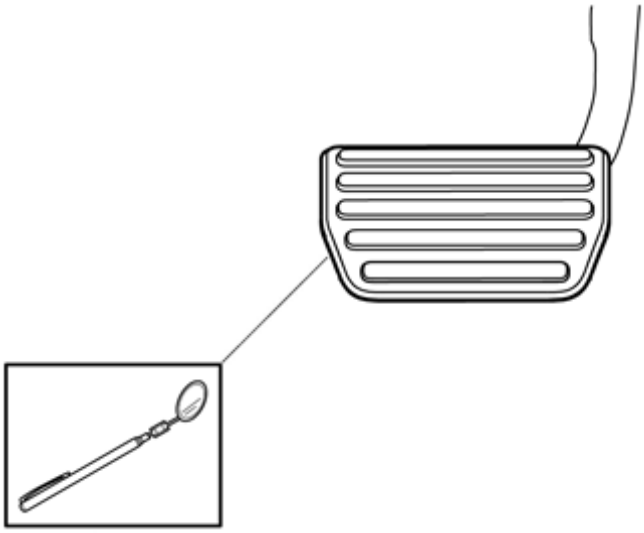

IMG-339857

Caution!

Using a mirror, check that the profiles of the protector are around the edges of the pedal.

14

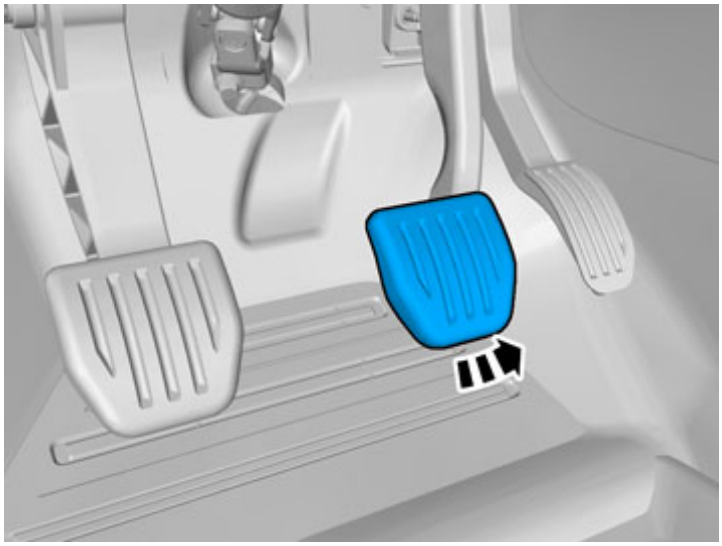

IMG-339858

Applies to cars with manual gearbox

Note!

The component(s) must not be reused.

15

IMG-339859

Applies to cars with manual gearbox

Hook the protector on to the brake pedal at the upper edge and pull downwards.

16

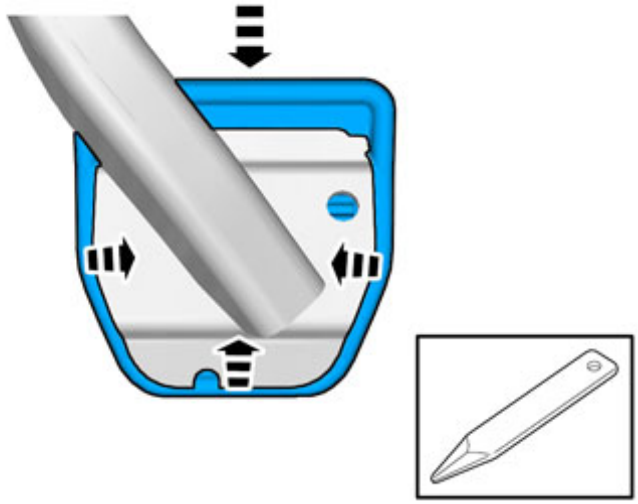

IMG-339860

Applies to cars with manual gearbox

Press the protector towards the pedal, at the same time as folding the protector's profile over using a weatherstrip tool. Important. Using a mirror, check that the profiles of the protector are around the edges of the pedal.

Repeat the steps for the clutch pedal.

© Volvo Car Corporation