Installation instructions, accessories

Volvo Car Corporation Gothenburg, Sweden

Instruction No	Version	Part. No.
32204253	1.0	32204251

Sill molding, illuminated, front

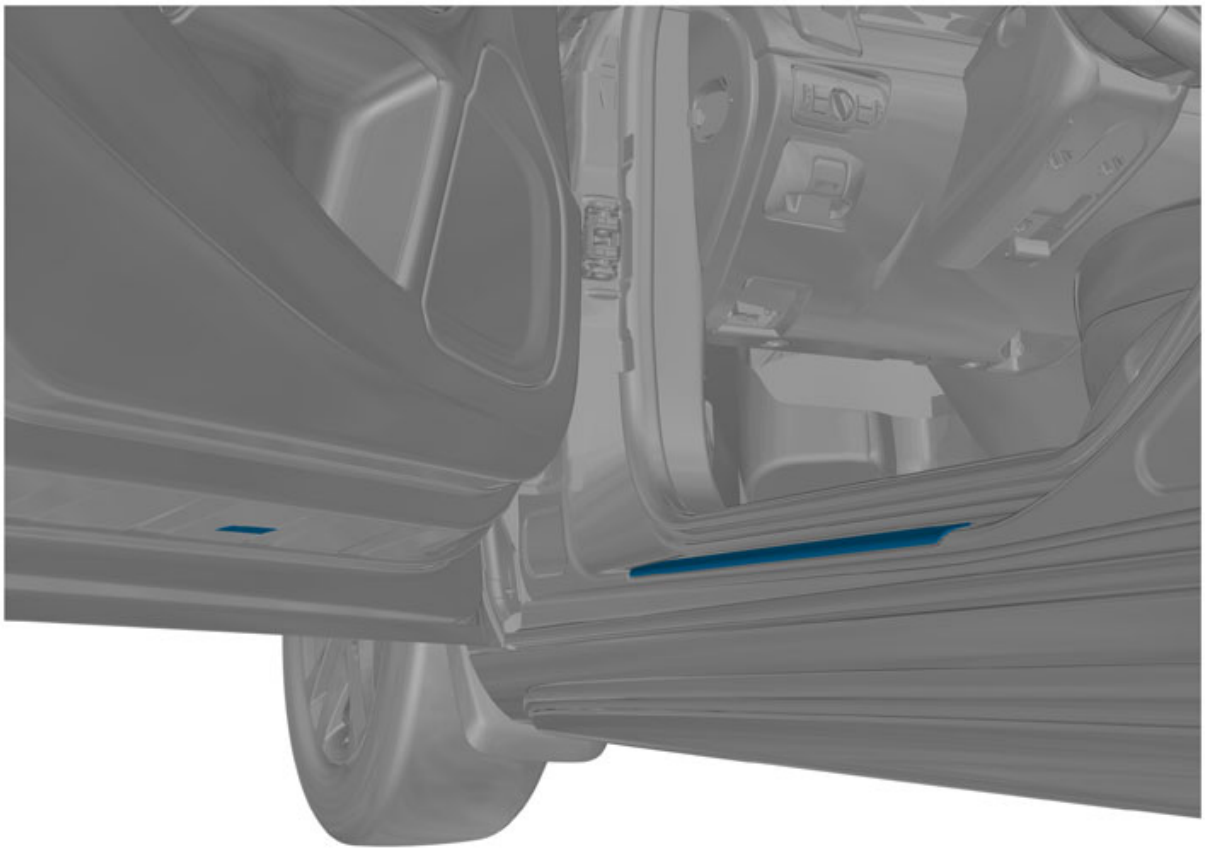

IMG-381450

Materials	
Designation	Part number
Isopropanol	1161721

Equipment

IMG-239667

© Volvo Car Corporation

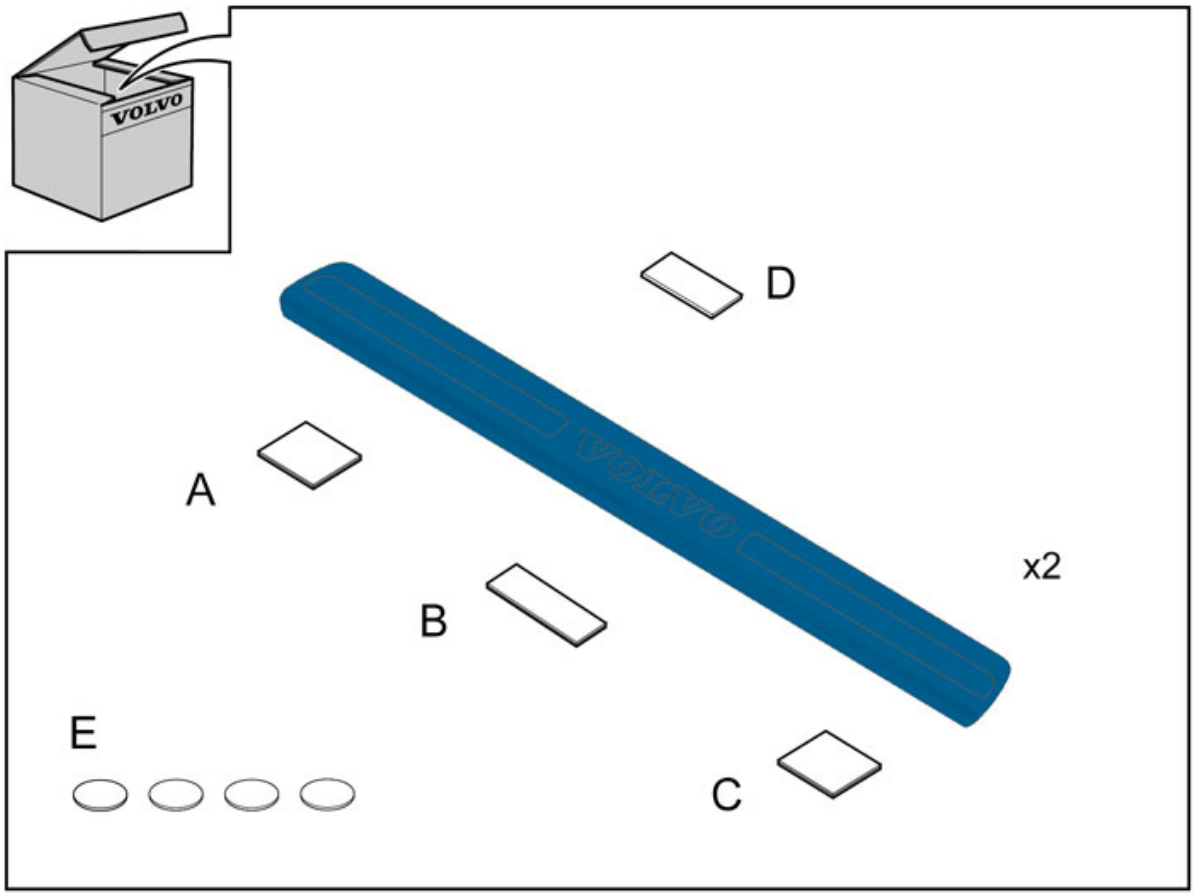

IMG-381484

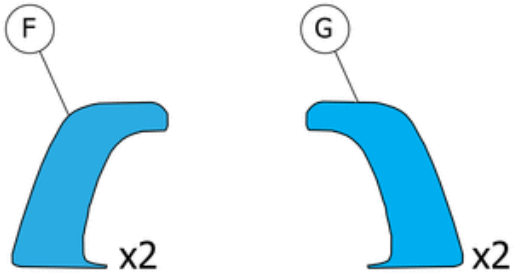

IMG-434515

	Information
1	Read through all of the instructions before starting installation. Notifications and warning texts are for your safety and to minimise the risk of something breaking during installation. Ensure that all tools stated in the instructions are available before starting installation. Certain steps in the instructions are only presented in the form of images. Explanatory text is also given for more complicated steps. In the event of any problems with the instructions or the accessory, contact your local Volvo dealer.
	Color symbols
2	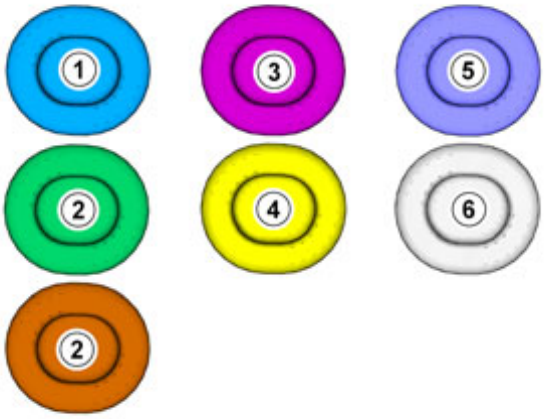 IMG-363036 **Note!** This colour chart displays (in colour print and electronic version) the importance of the different colours used in the images of the method steps. 1. Used for focused component, the component with which you will do something. 2. Used as extra colors when you need to show or differentiate additional parts. 3. Used for attachments that are to be removed/installed. May be screws, clips, connectors, etc. 4. Used when the component is not fully removed from the vehicle but only hung to the side. 5. Used for standard tools and special tools. 6. Used as background color for vehicle components.
	Preparation

3

IMG-400004

When installing, the car must retain a temperature of 20 degrees C.

Removal

4

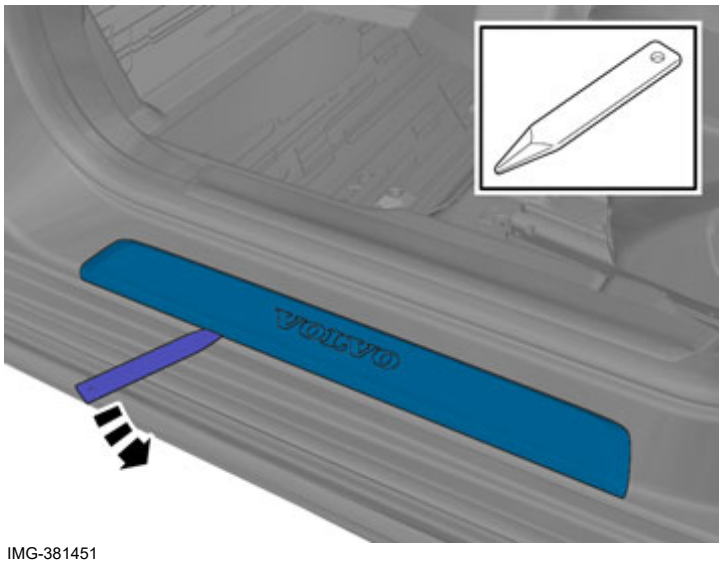

IMG-381451

Use: Interior trim remover

5

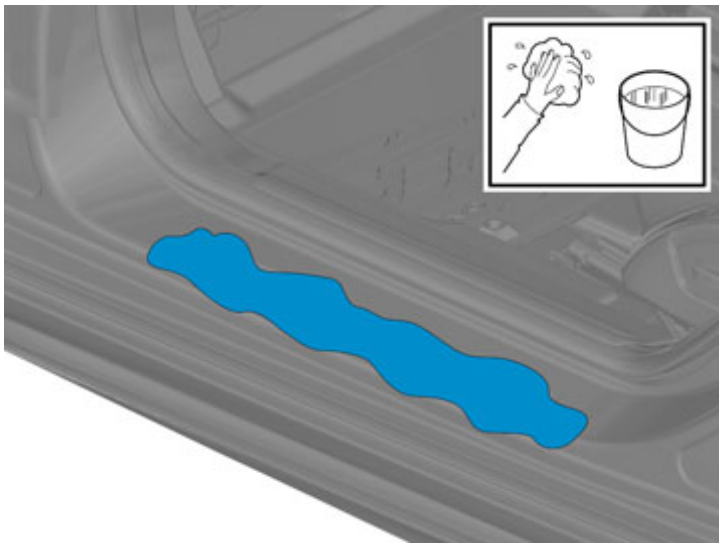

IMG-381452

Use: 1161721, Isopropanol

Clean the surface.

Wipe dry.

Accessory installation

6

IMG-434520

Remove the protective film.

Install component that comes with the accessory kit.

7

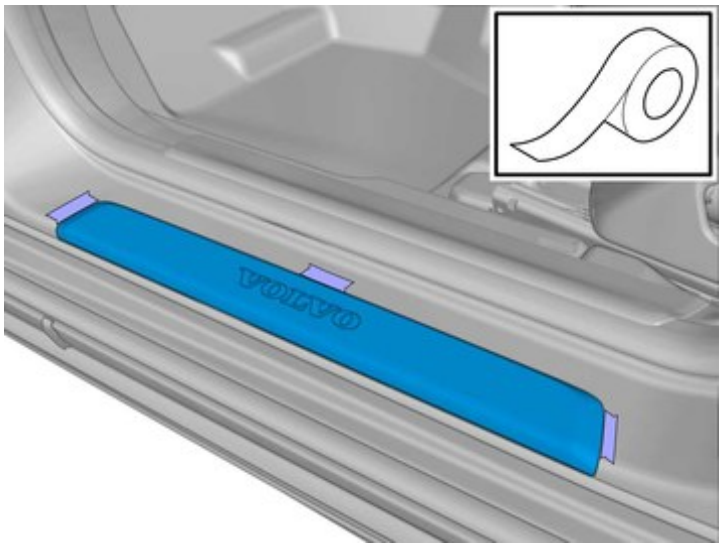

IMG-389806

Use appropriate tape to mark the position.

8

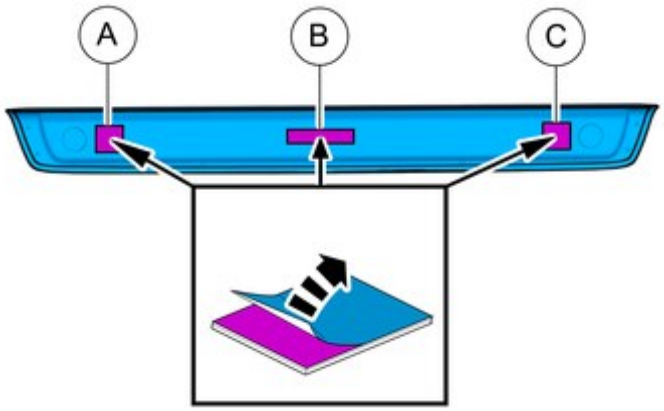

IMG-384905

Remove the protective film.

9

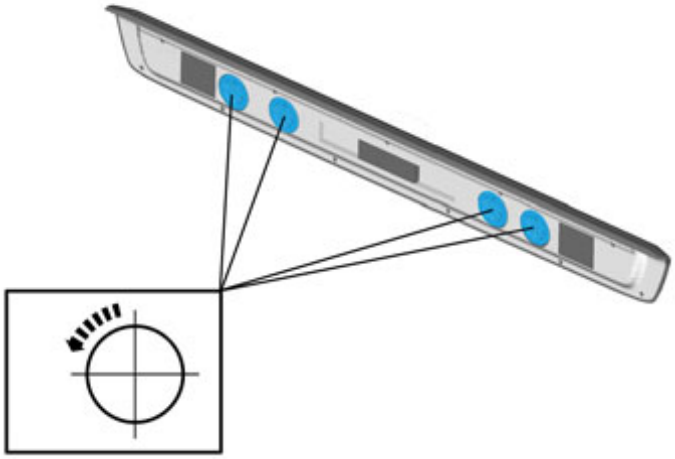

IMG-381455

10

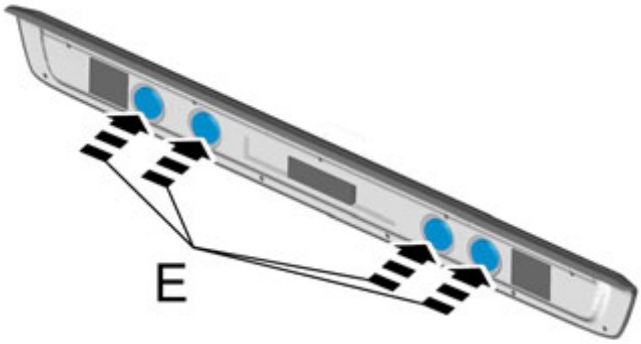

IMG-381486

11

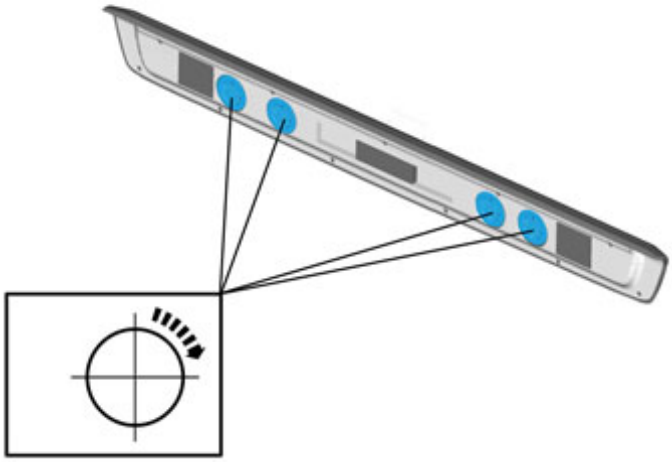

IMG-381491

12

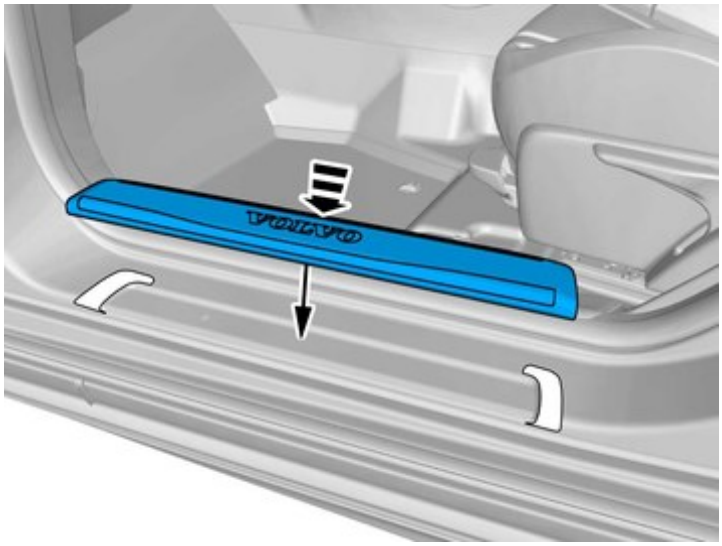

IMG-435231

Install component that comes with the accessory kit.

13

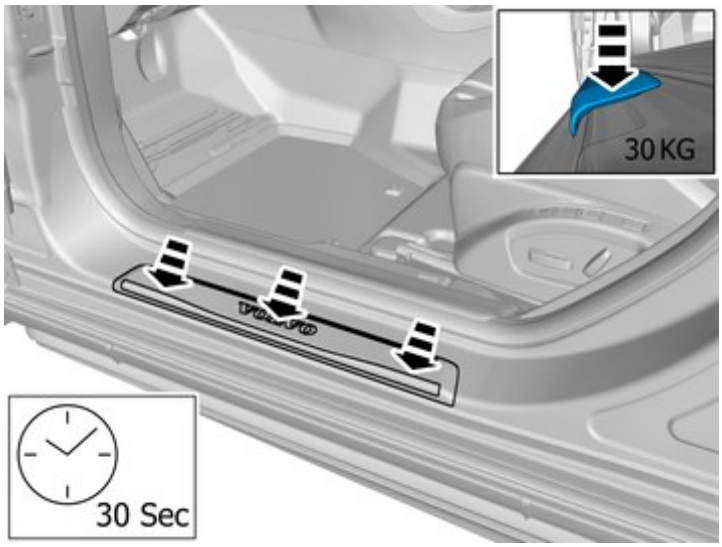

IMG-389626

Note!
Apply pressure only where the tape is located.

Note!
Maintain a constant pressure above each piece of tape for the time specified in the image.

Note!
Ensure that the tape is fixed to the surface.

14

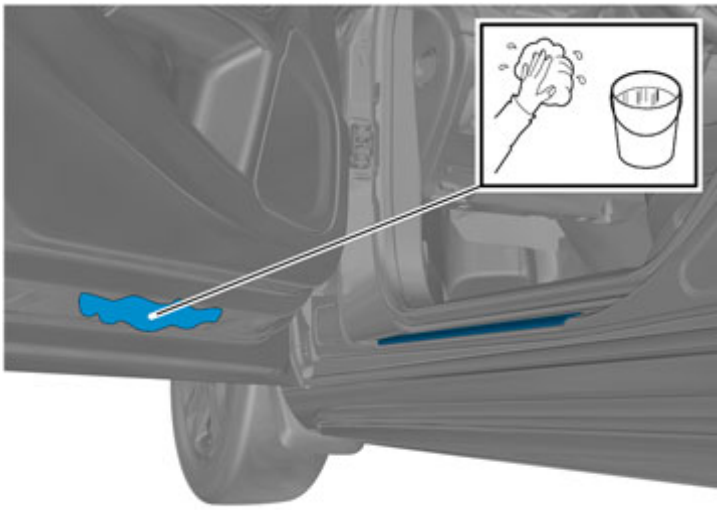

IMG-381490

Use: 1161721, Isopropanol

Clean the surface.

Wipe dry.

15

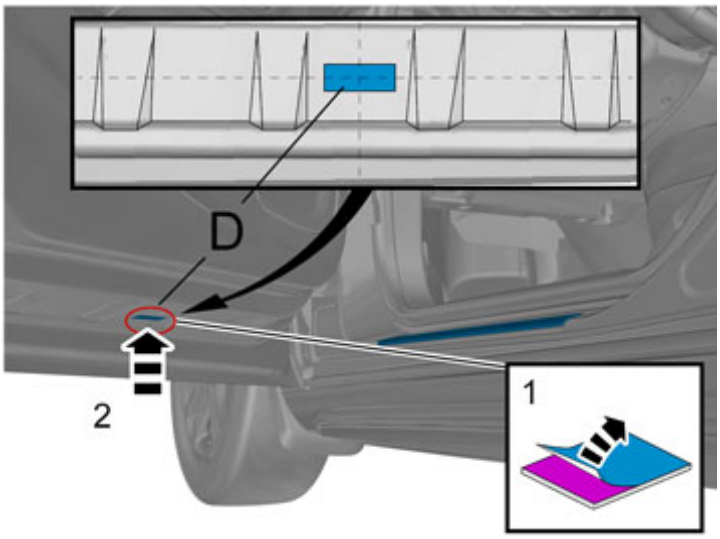

IMG-381488

Install component that comes with the accessory kit.

16

Repeat all method steps for the other side.

17

Warning!
Check for correct operation after the installation.