Installation instructions, accessories

Volvo Car Corporation Gothenburg, Sweden

Instruction No	Version	Part. No.
31316437	1.1	31402730, 31352951, 30799046

Mirror, rearview, autodimming

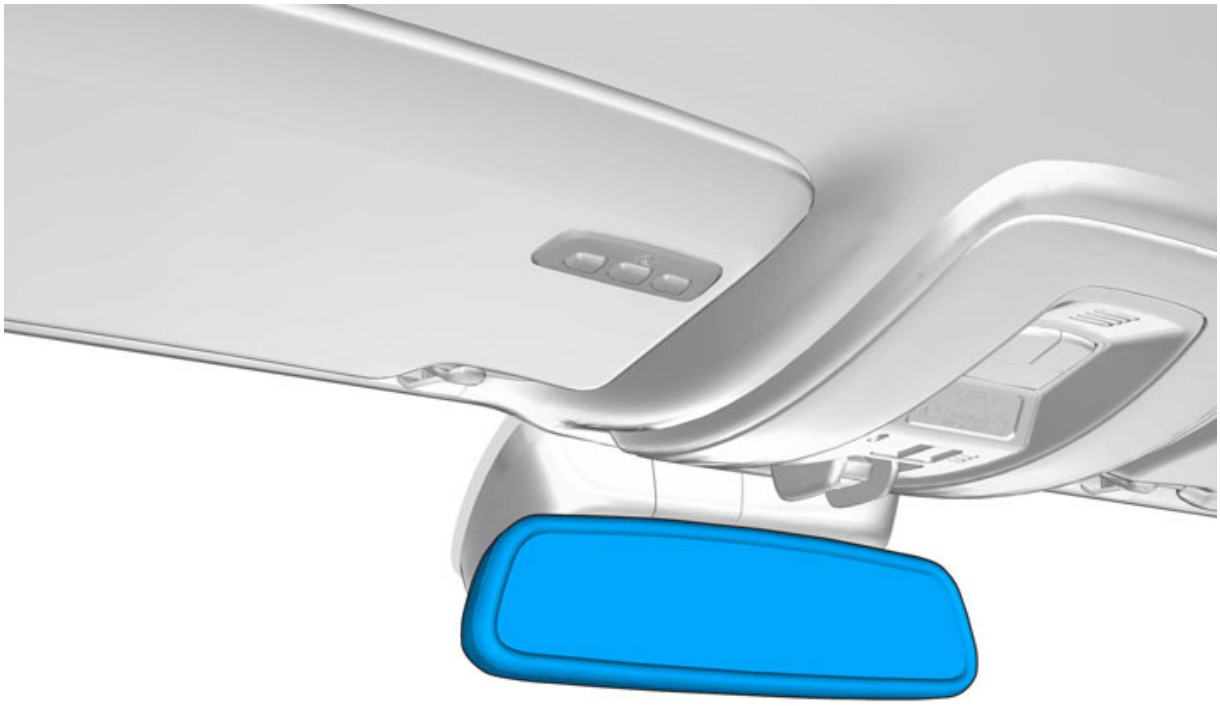

IMG-338611

Equipment

IMG-242205

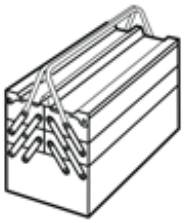

A0000162

© Volvo Car Corporation

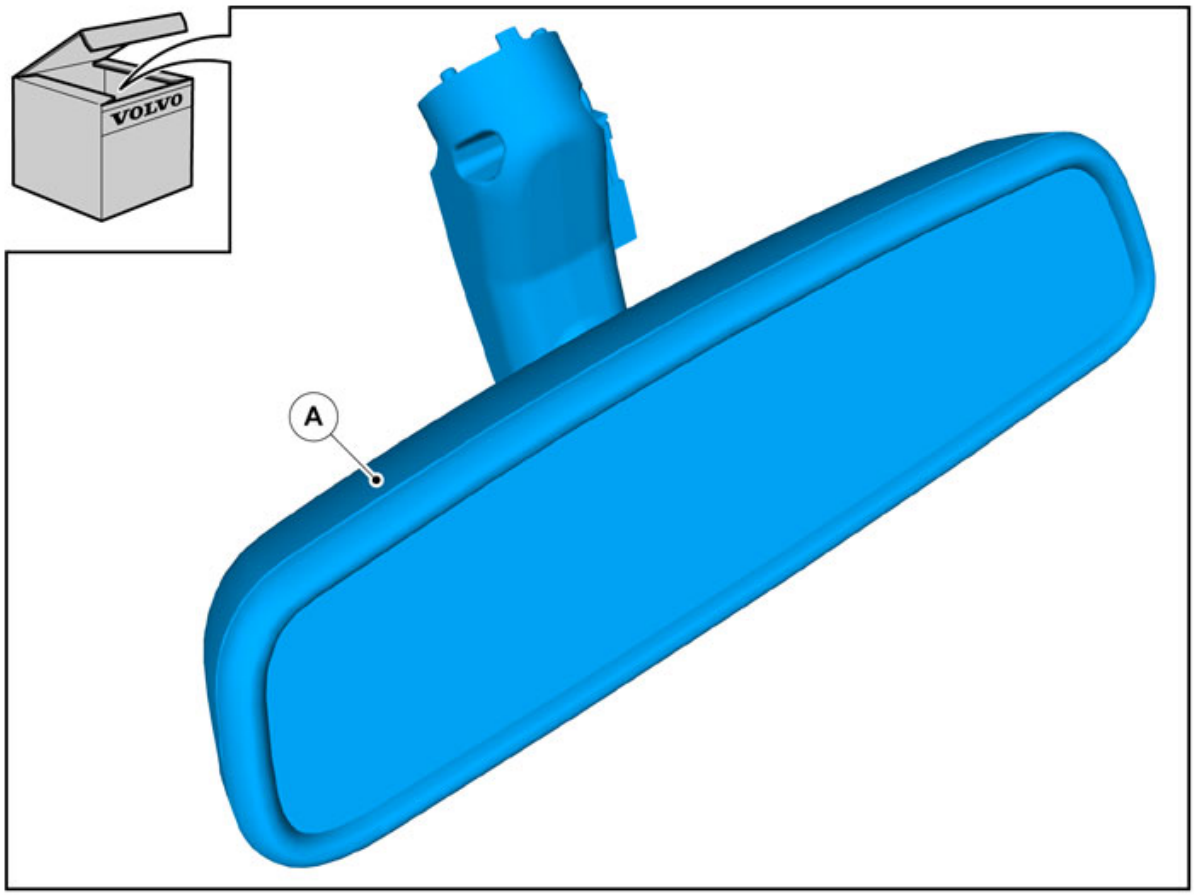

IMG-338612

	Information
1	Read through all of the instructions before starting installation. Notifications and warning texts are for your safety and to minimise the risk of something breaking during installation. Ensure that all tools stated in the instructions are available before starting installation. Certain steps in the instructions are only presented in the form of images. Explanatory text is also given for more complicated steps. In the event of any problems with the instructions or the accessory, contact your local Volvo dealer.
	Conditions
2	Set the ignition key to position 0. 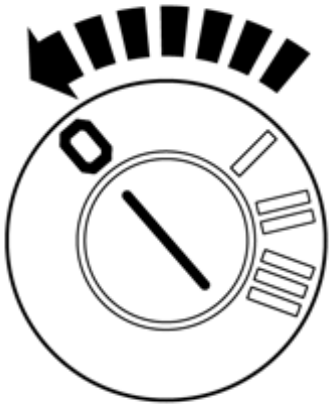 IMG-332193
3	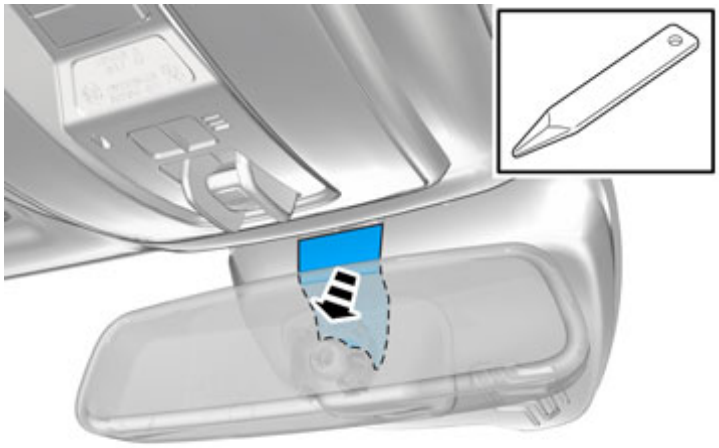 IMG-338613

4

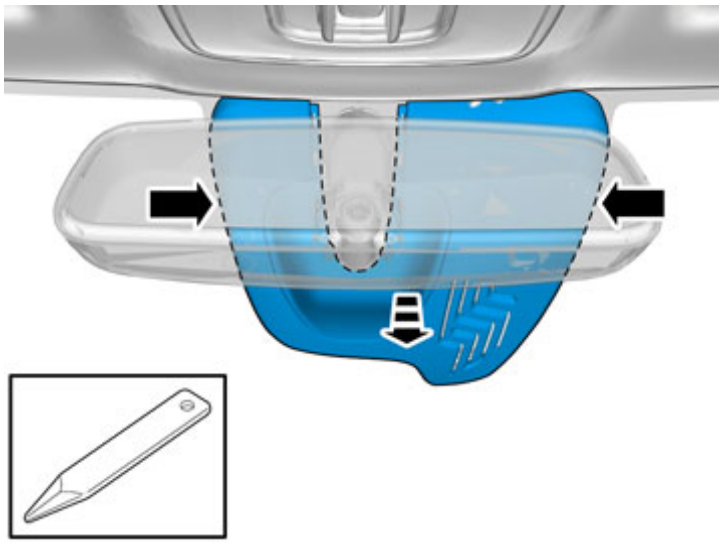

IMG-338614

5

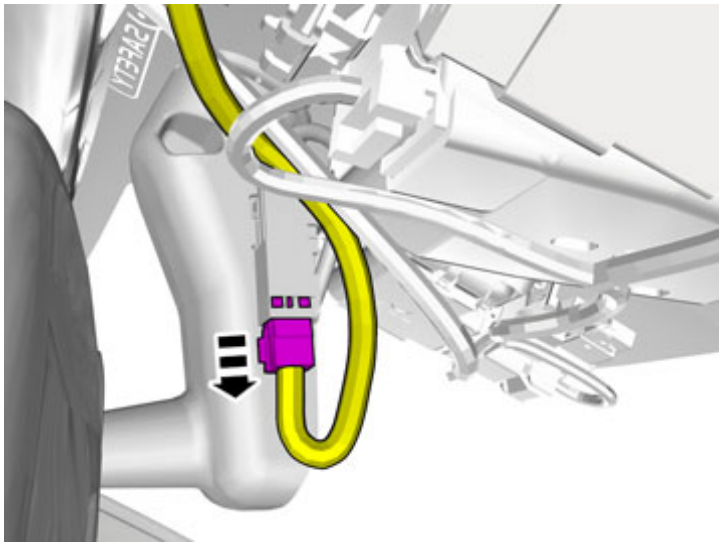

IMG-338615

Disconnect any connector(s).

6

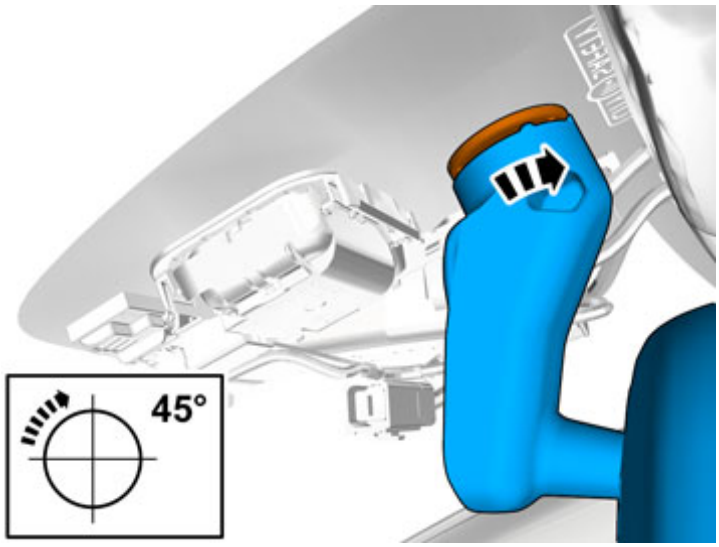

IMG-338616

Vehicles with manual dimming interior mirror

7

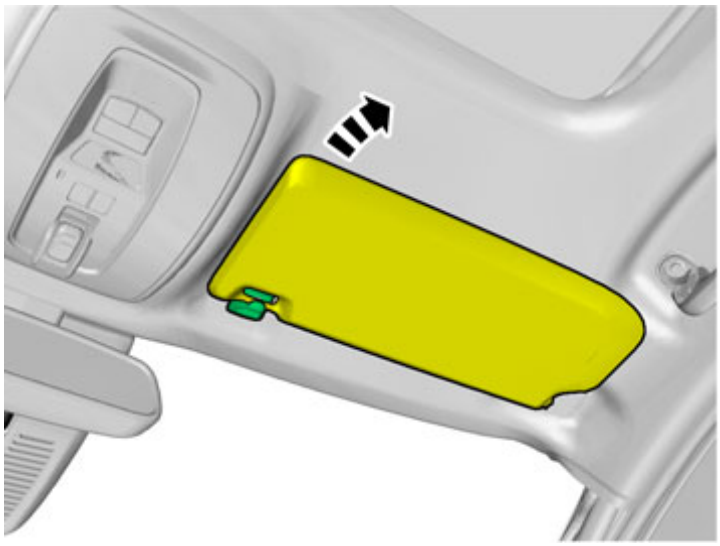

IMG-304689

8

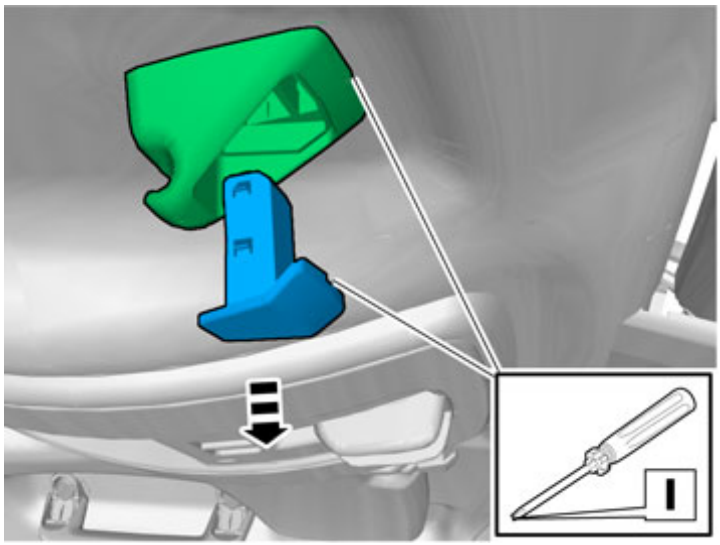

IMG-304690

9

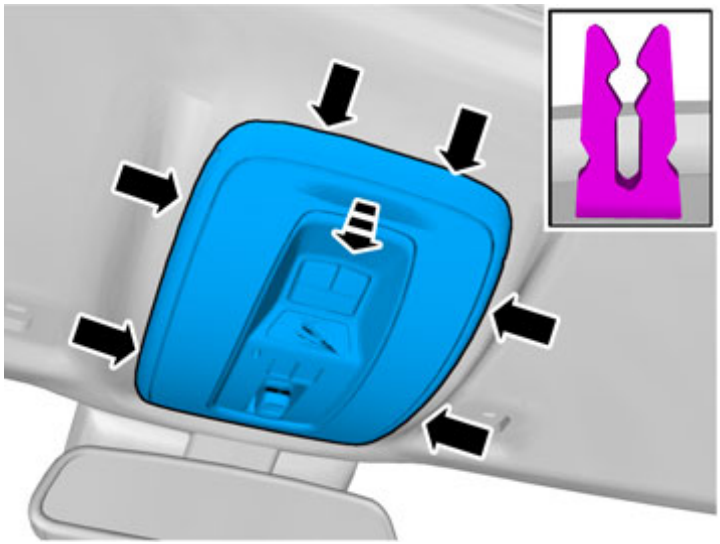

IMG-304691

10

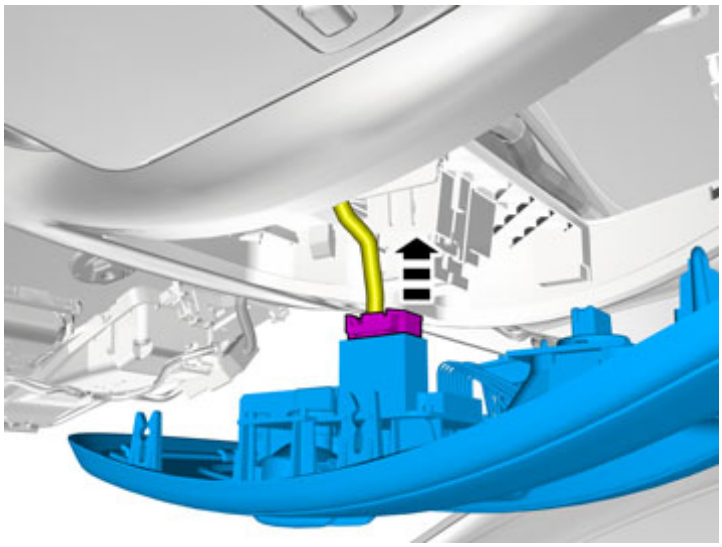

IMG-338621

11

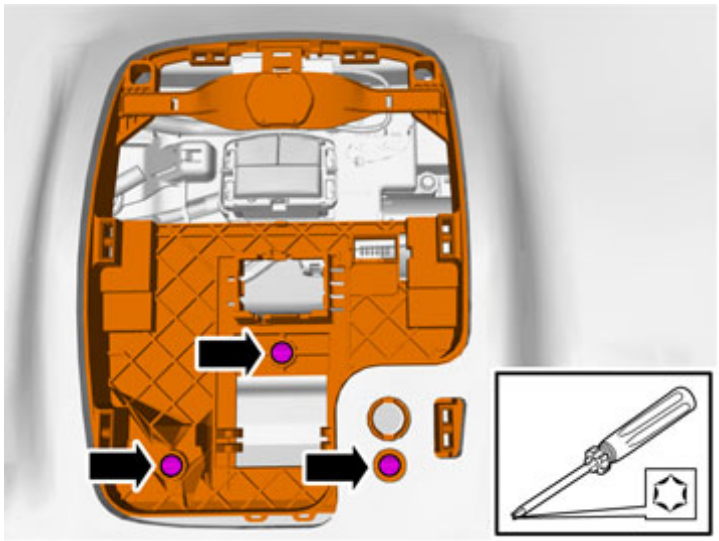

IMG-304692

12

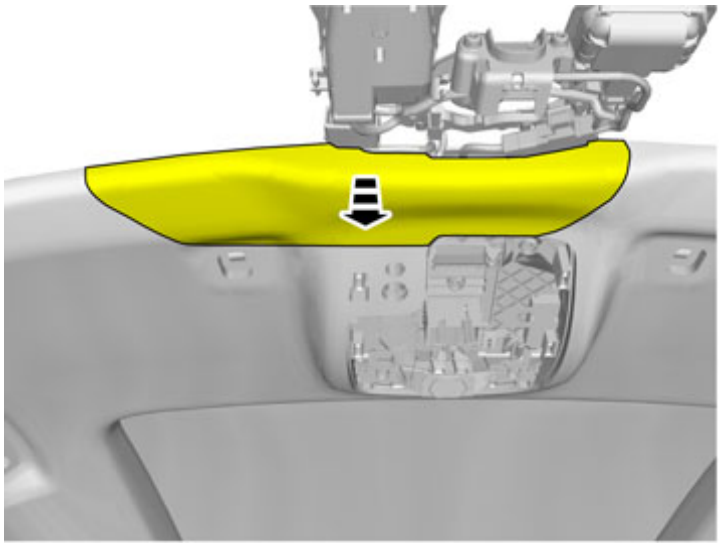

IMG-304693

13

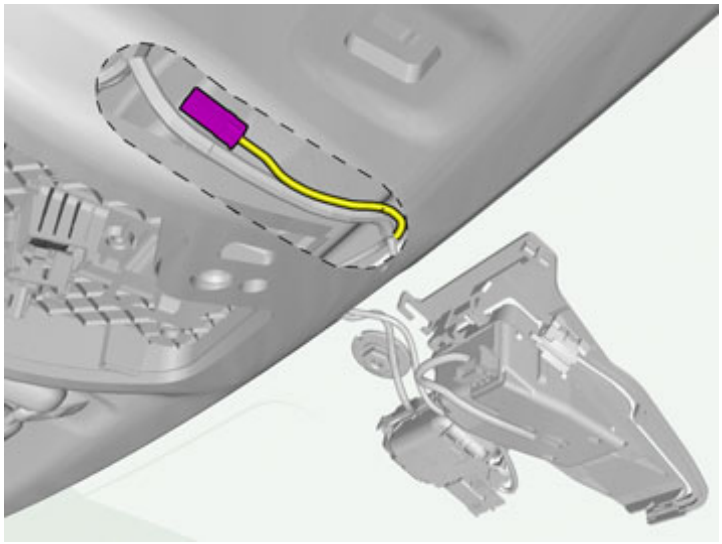

IMG-350152

Locate the pre-routed connector.

All vehicles

14

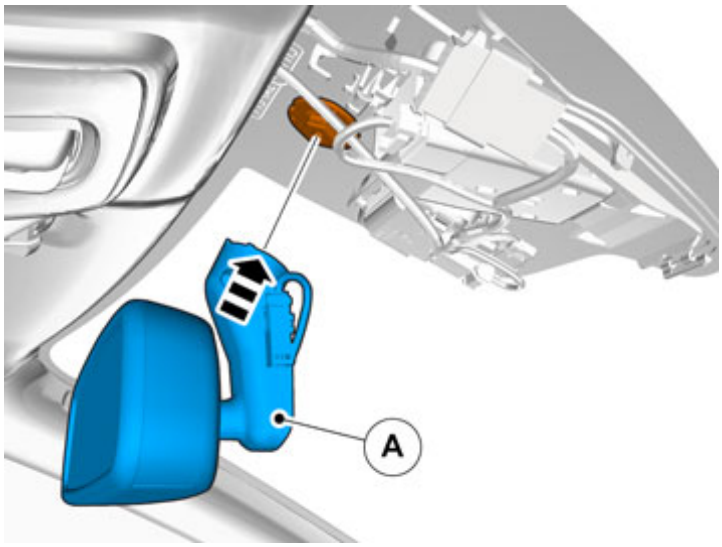

IMG-338617

15

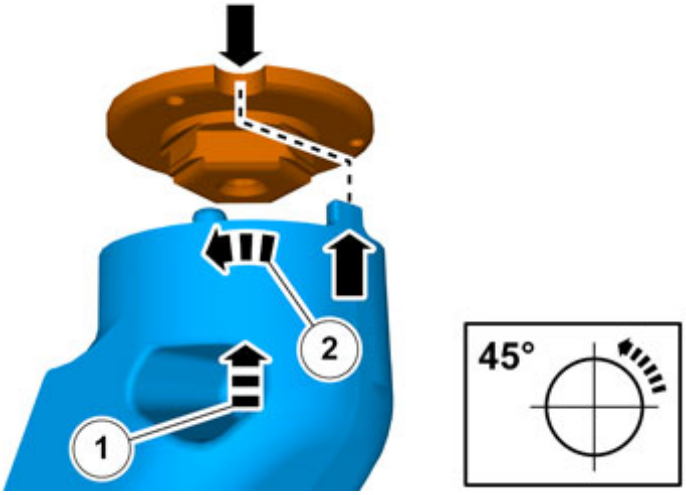

IMG-338619

16

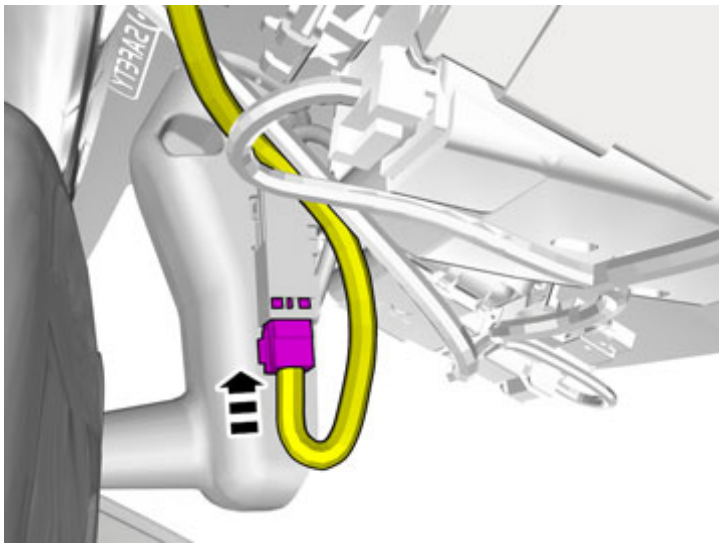

IMG-338620

Connect the connector.

Reinstall the removed parts in reverse order.

17

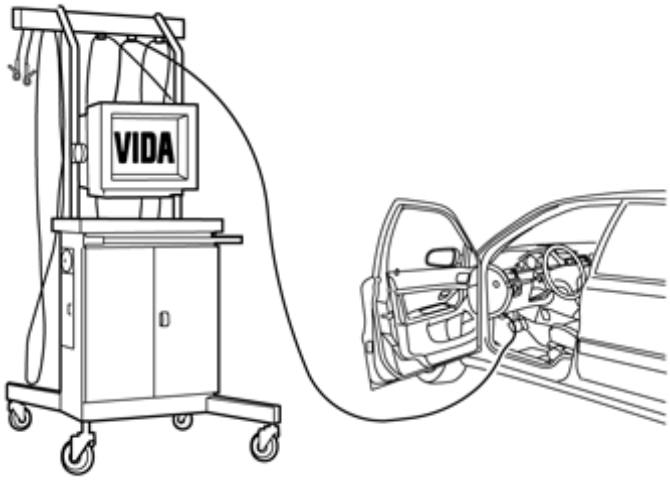

IMG-242268

Download software (application) for the accessory's function according to the service information in VIDA. See VIDA or the accessories catalogue for software part number.