Installation instructions, accessories

Volvo Car Corporation Gothenburg, Sweden

Instruction No	Version	Part. No.
31256267	1.2	31259377, 31259376, 31259341, 31259407, 31259339, 31259373, 31259409, 31259372, 31259408, 31259342, 31259406, 31259340, 31259086, 31259085, 30756902, 30756901

Gear shift knob

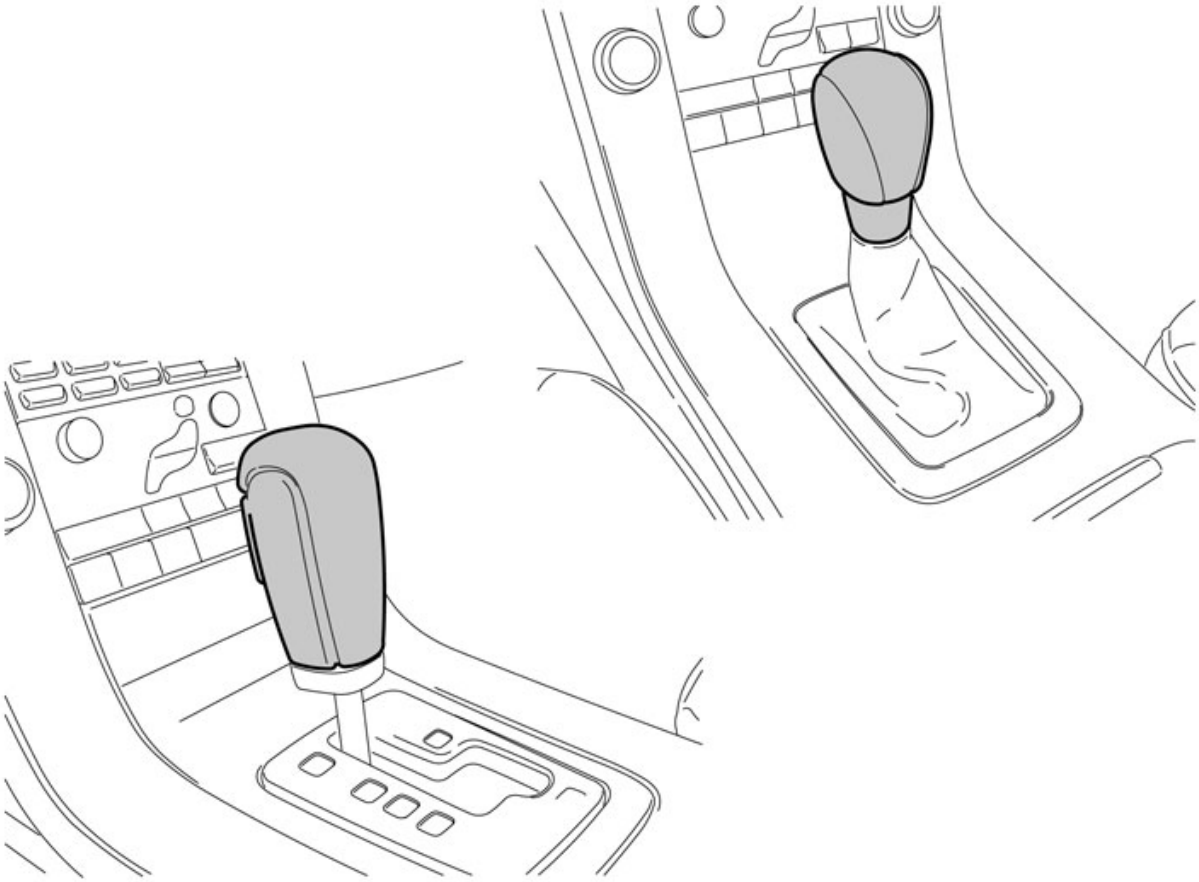

IMG-233441

Equipment

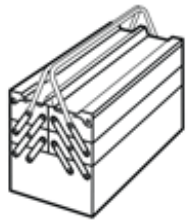

A0000162

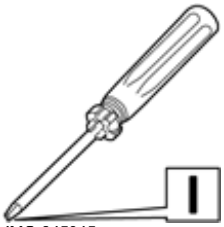

IMG-245345

© Volvo Car Corporation

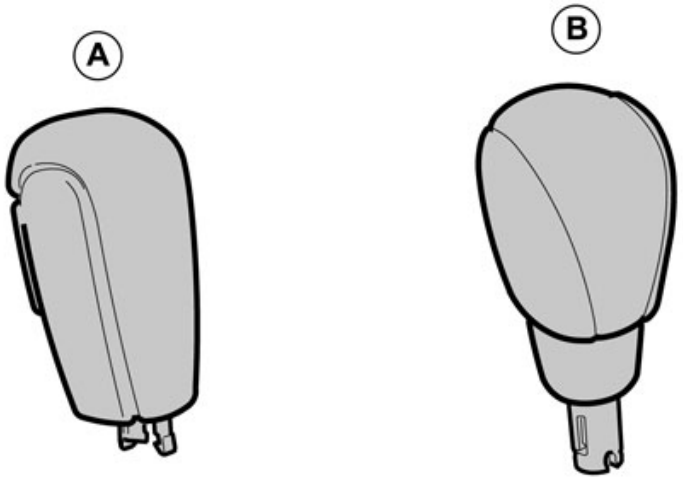

IMG-233442

Any comments on this publication? Please contact your nearest retailer. Thank You!

Publ.no:	Issue:	Kit no:

Comments:.....

.....

.....

.....

From:	
Address:	
Telephone:	
Telefax:	

IMG-213320

INTRODUCTION

Read through all of the instructions before starting installation.

Notifications and warning texts are for your safety and to minimise the risk of something breaking during installation.

Ensure that all tools stated in the instructions are available before starting installation.

Certain steps in the instructions are only presented in the form of images. Explanatory text is also given for more complicated steps.

In the event of any problems with the instructions or the accessory, contact your local Volvo dealer.

1

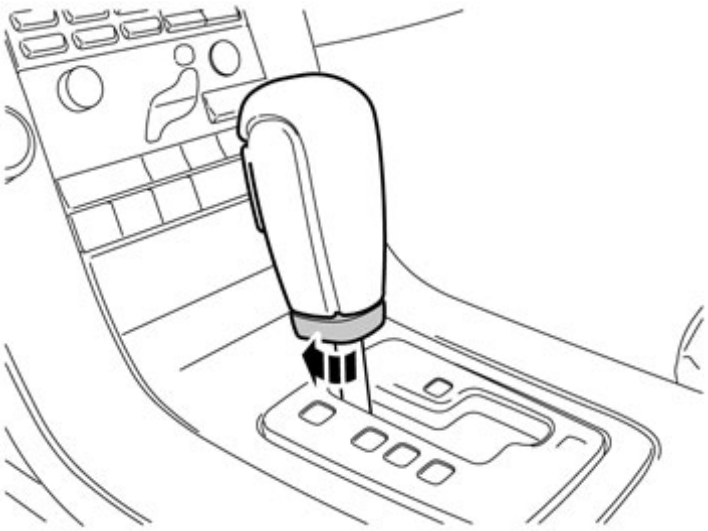

IMG-233443

Steps 1-7 apply to cars with automatic transmission

Turn the locking sleeve on the gear selector lever knob a quarter turn clockwise.

2

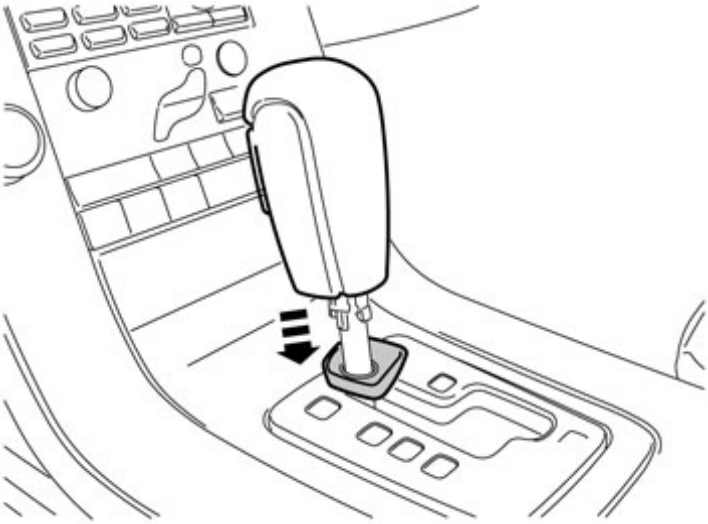

IMG-233444

Pull the locking sleeve downwards.

3

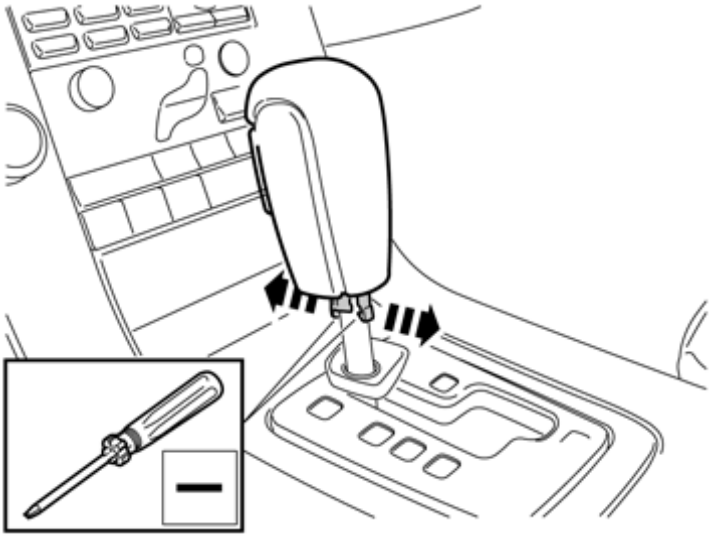

IMG-233445

Pry out the 2 x catches at the front and rear edge using a small screwdriver.

4

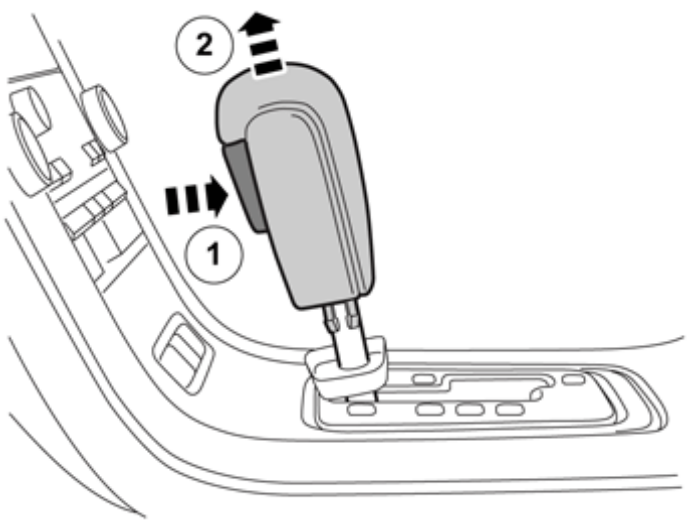

IMG-282123

Press in the lock button (1) and pull the gear shift knob straight up (2).

5

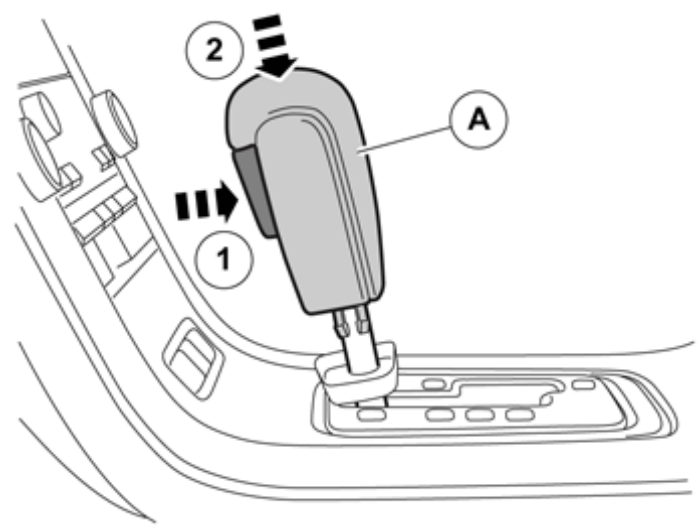

IMG-282124

Install the new gear shift knob (A) by first pressing in the lock button (1). Then push it down (2) until the catches engage.

6

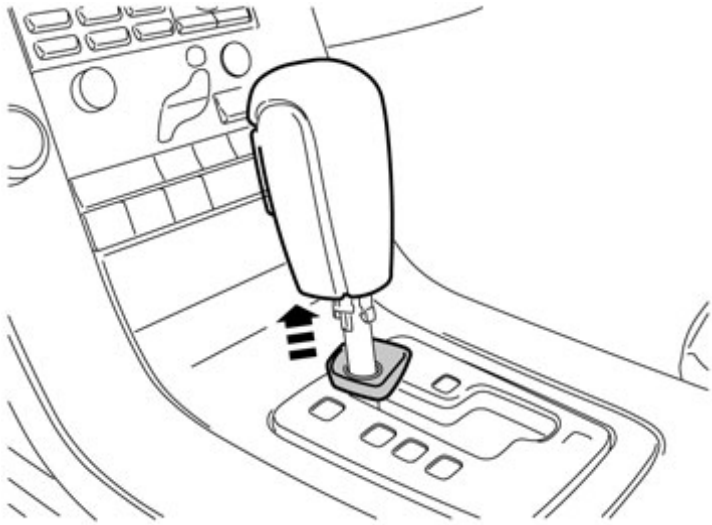

IMG-233449

Move the locking sleeve up over the catches.

7

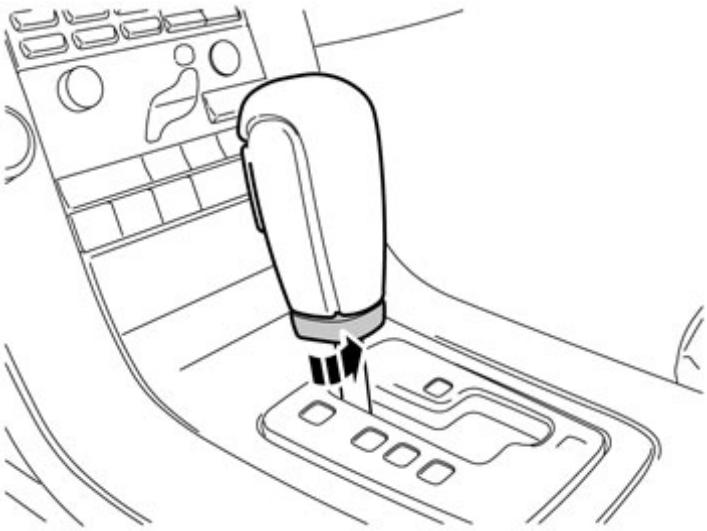

IMG-233450

Turn the locking sleeve on the gear selector lever knob a quarter turn counter-clockwise.

Warning!

Check that the Shift-Lock function works.

8

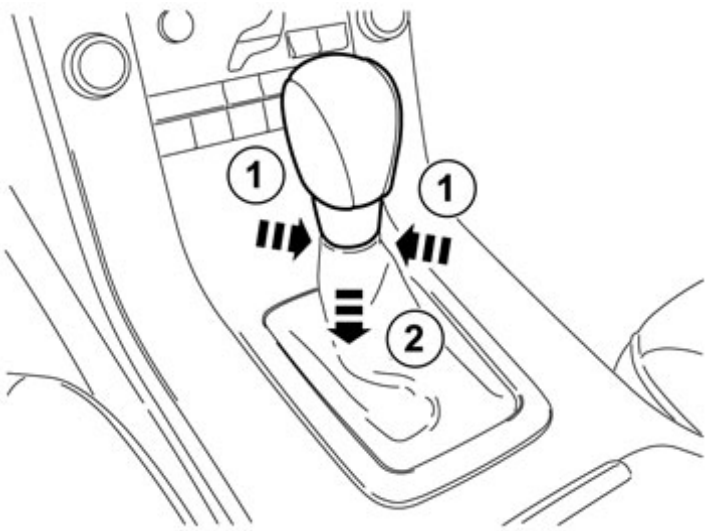

IMG-233451

Steps 8-12 apply to cars with manual transmissions

Grasp the locking ring that is located under the gear selector lever knob and before the boot. Work loose slightly and pull the locking sleeve and boot down. Take care so that the boot does not jump out of the locking ring.

9

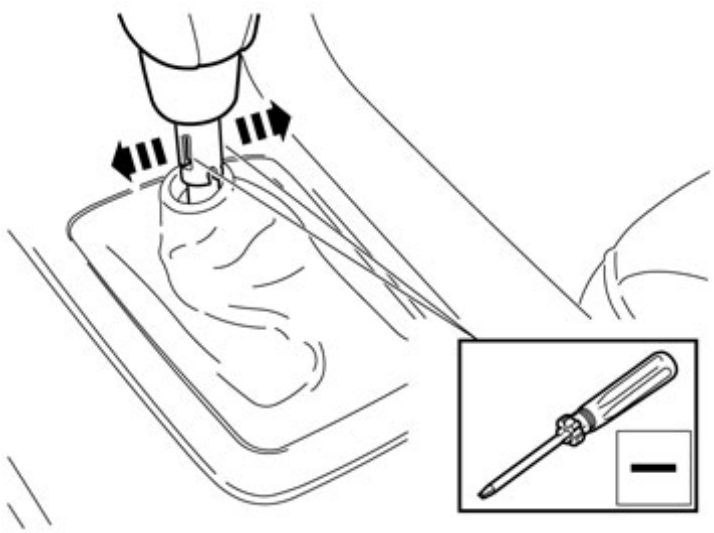

IMG-233452

Pry out the 2 x catches on the side using a small screwdriver.

10

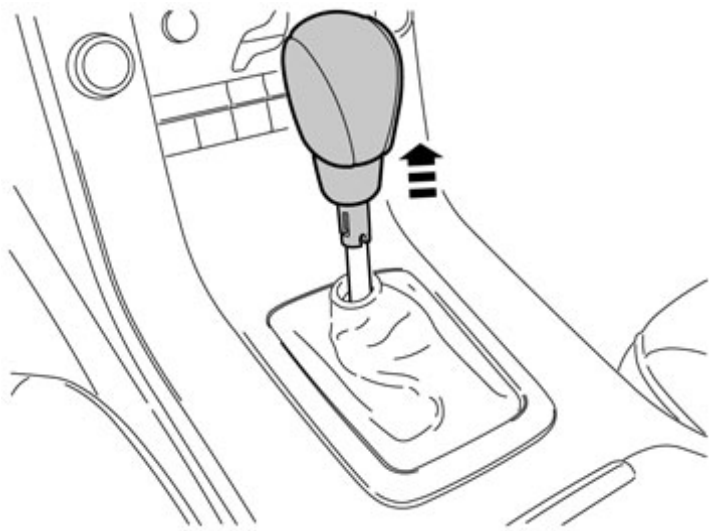

IMG-233453

Pull the gear selector lever knob straight up.

11

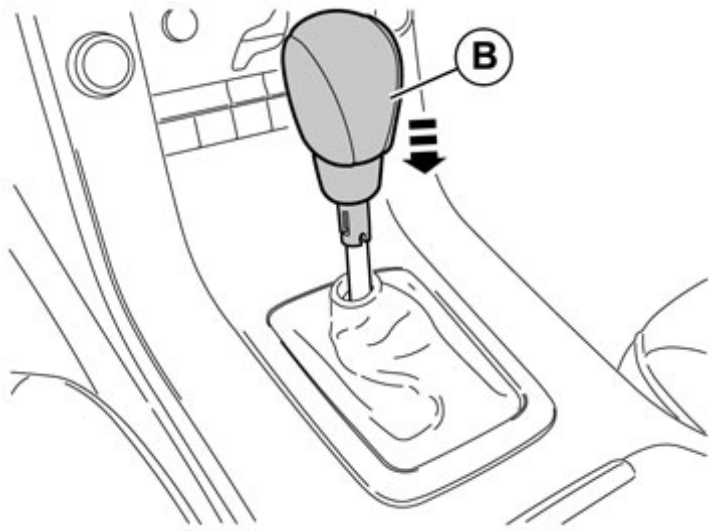

IMG-233455

Install the new gear selector lever knob.

Press downwards until all the catches engage.

12

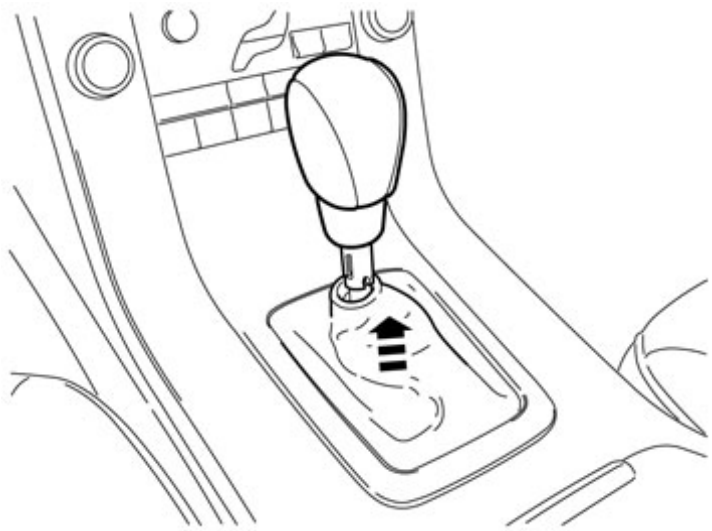

IMG-233458

Move the boot and locking ring up so that the locking ring hooks into the gear selector lever knob.

© Volvo Car Corporation