Installation instructions, accessories

Volvo Car Corporation Gothenburg, Sweden

Instruction No	Version	Part. No.
30756670	1.2	30756959, 31339874

Load compartment divider

Equipment

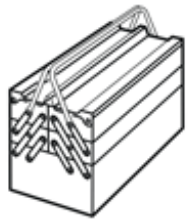

A0000162

IMG-239943

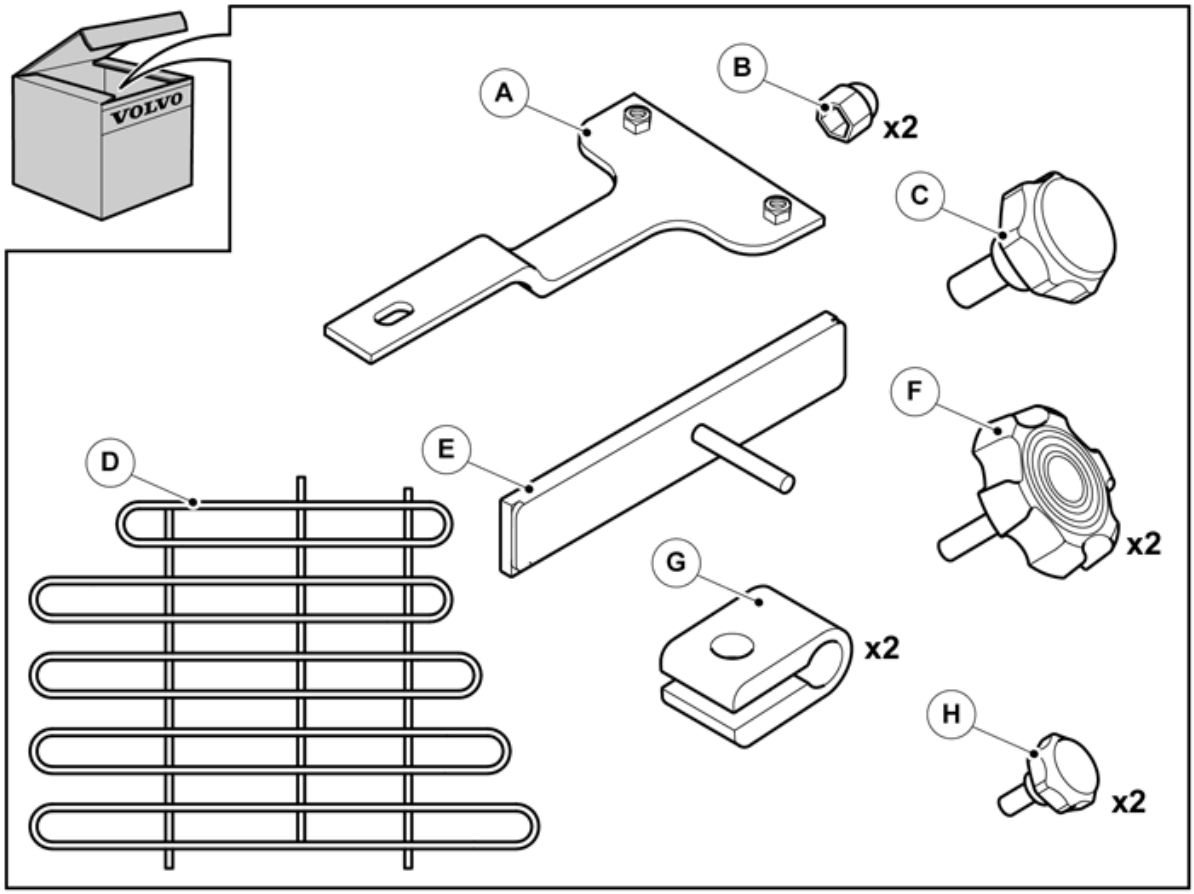

IMG-329769

Any comments on this publication? Please contact your nearest retailer. Thank You!

Publ.no:	Issue:	Kit no:

Comments:.....

.....

.....

.....

From:	
Address:	
Telephone:	
Telefax:	

IMG-213320

INTRODUCTION

Read through all of the instructions before starting installation.

Notifications and warning texts are for your safety and to minimise the risk of something breaking during installation.

Ensure that all tools stated in the instructions are available before starting installation.

Certain steps in the instructions are only presented in the form of images. Explanatory text is also given for more complicated steps.

In the event of any problems with the instructions or the accessory, contact your local Volvo dealer.

1

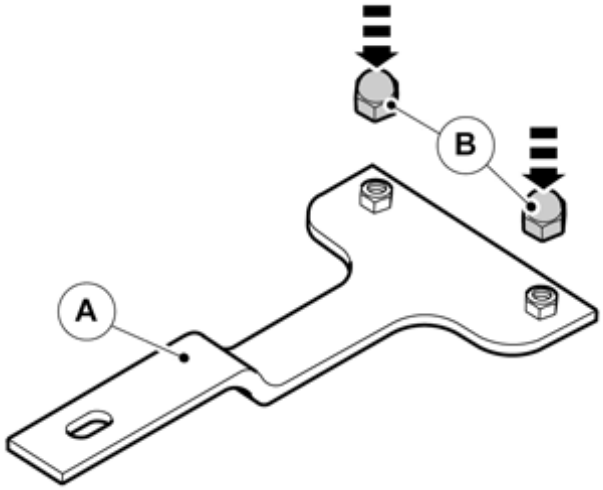

IMG-329793

2

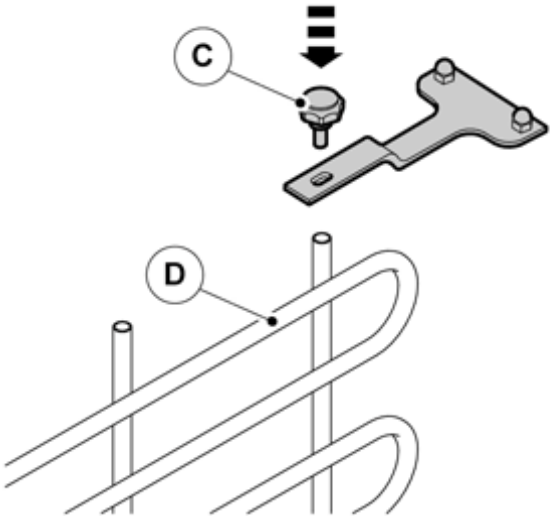

IMG-329794

Do not tighten.

3

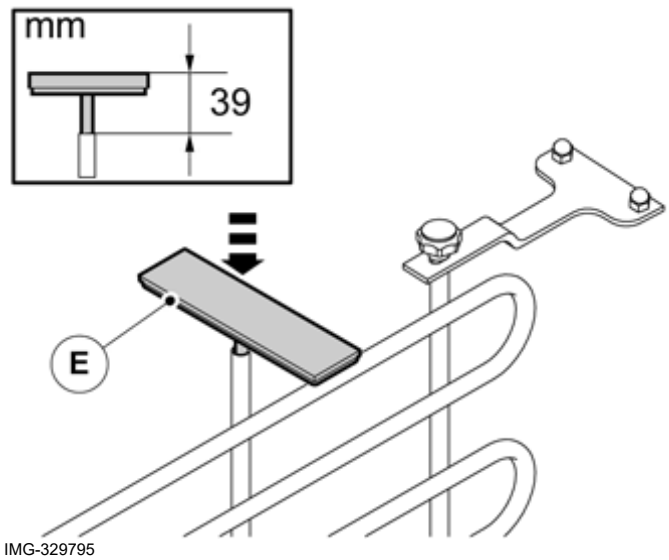

IMG-329795

4

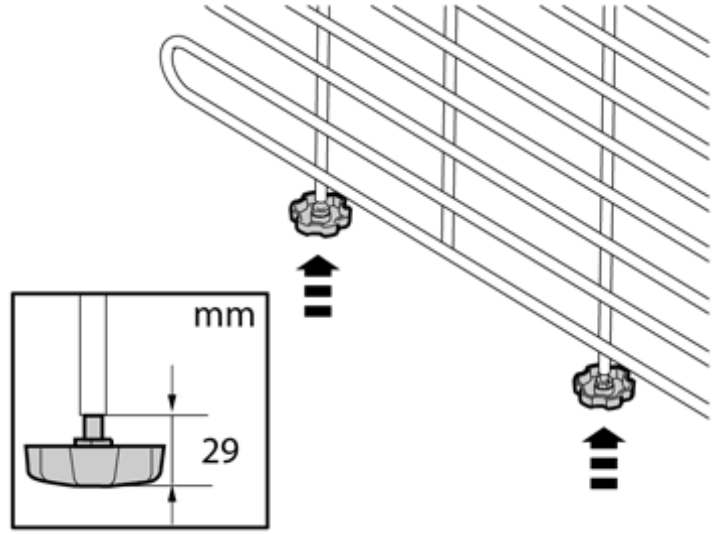

IMG-329798

5

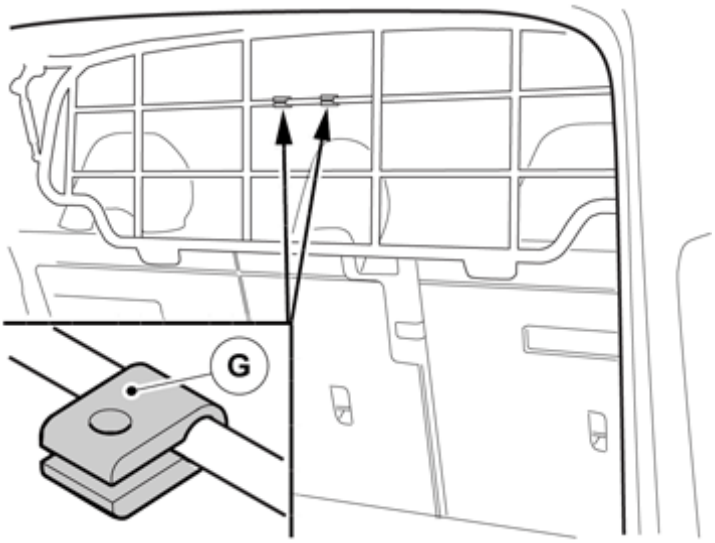

IMG-329803

6

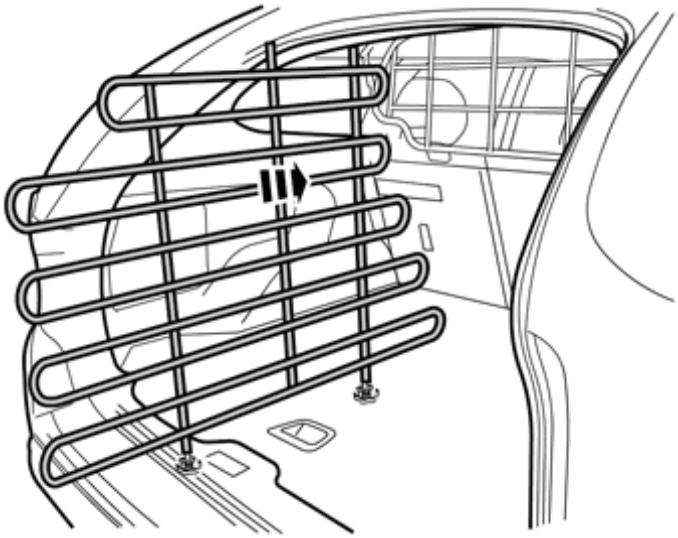

IMG-329808

7

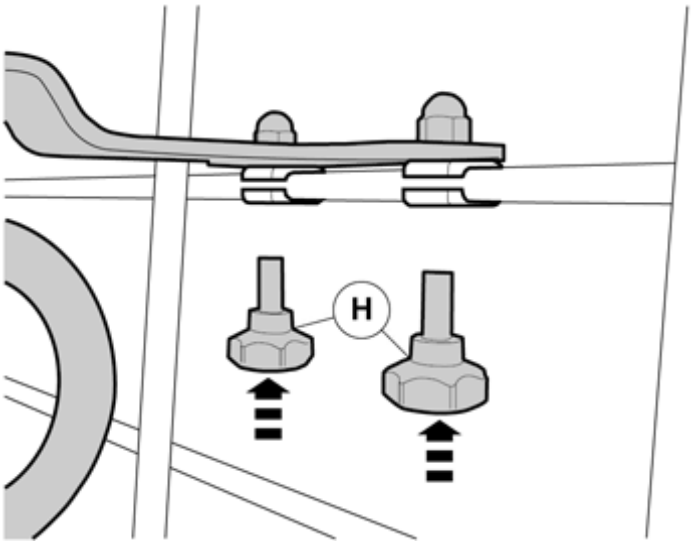

IMG-329809

Do not tighten.

8

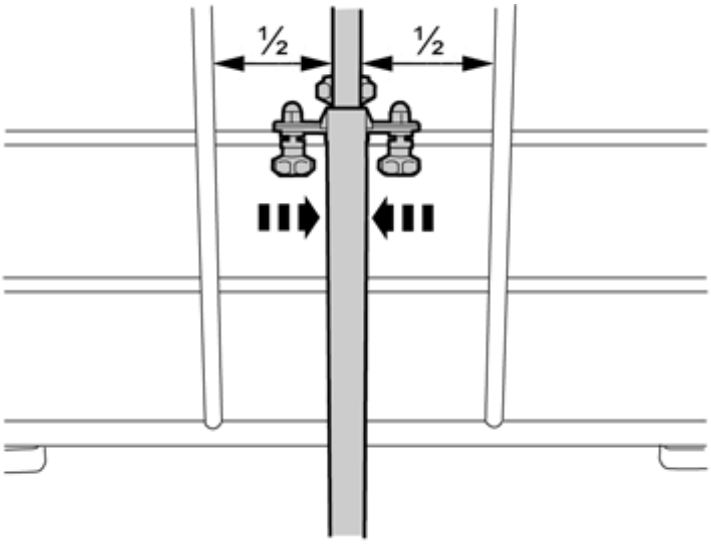

IMG-329810

9

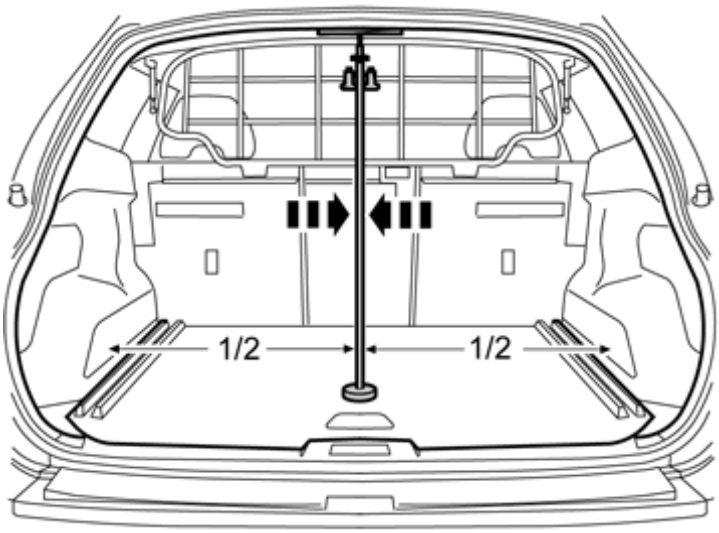

IMG-329811

Adjust so that the cargo compartment wall is vertical and in the centre of the cargo compartment.

10

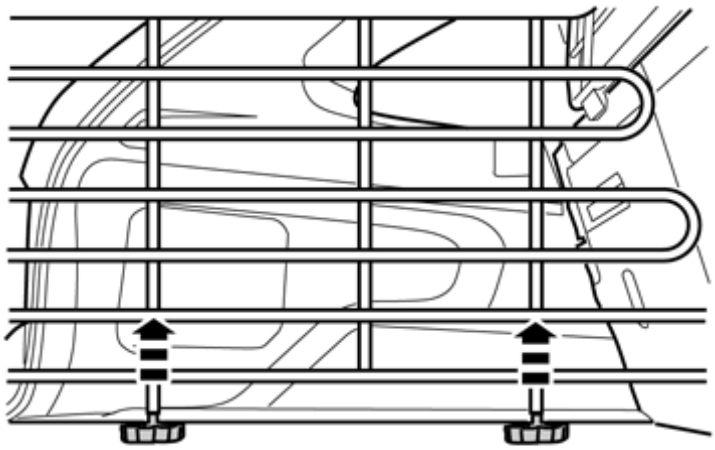

IMG-329812

Tighten the knobs and secure the grille. The grille must be parallel with the floor hatch.

11

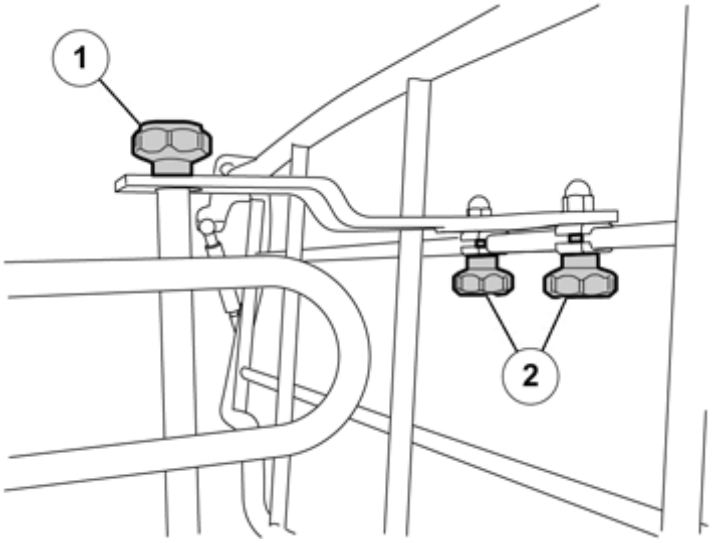

IMG-329813

Tighten the knobs.