Installation instructions, accessories

Volvo Car Corporation Gothenburg, Sweden

Instruction No	Version	Part. No.
31650293	1.0	32351434, 31650287

Mudflaps, front

Equipment

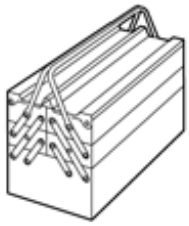

IMG-345497

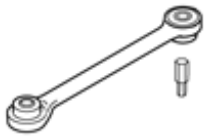

IMG-268803

IMG-239981

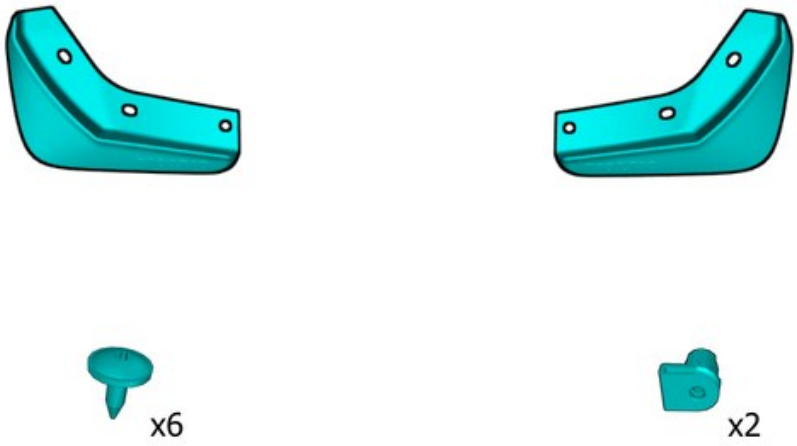

IMG-441737

Information

1

Read through all of the instructions before starting installation.

Notifications and warning texts are for your safety and to minimise the risk of something breaking during installation.

Ensure that all tools stated in the instructions are available before starting installation.

Certain steps in the instructions are only presented in the form of images. Explanatory text is also given for more complicated steps.

In the event of any problems with the instructions or the accessory, contact your local Volvo dealer.

Color symbols

2

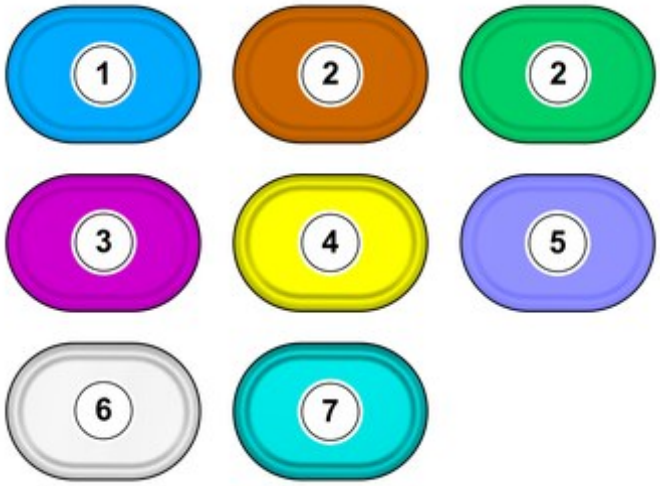

IMG-400010

Note!
This colour chart displays (in colour print and electronic version) the importance of the different colours used in the images of the method steps.

1. Used for focused component, the component with which you will do something.
2. Used as extra colors when you need to show or differentiate additional parts.
3. Used for attachments that are to be removed/installed. May be screws, clips, connectors, etc.
4. Used when the component is not fully removed from the vehicle but only hung to the side.
5. Used for standard tools and special tools.
6. Used as background color for vehicle components.
7. Used for accessory components.

Preparation

3

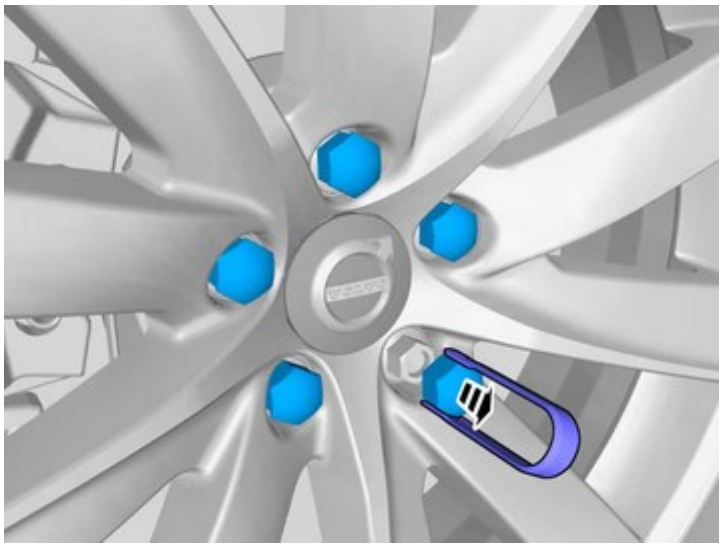

IMG-441867

Remove the marked part.

4

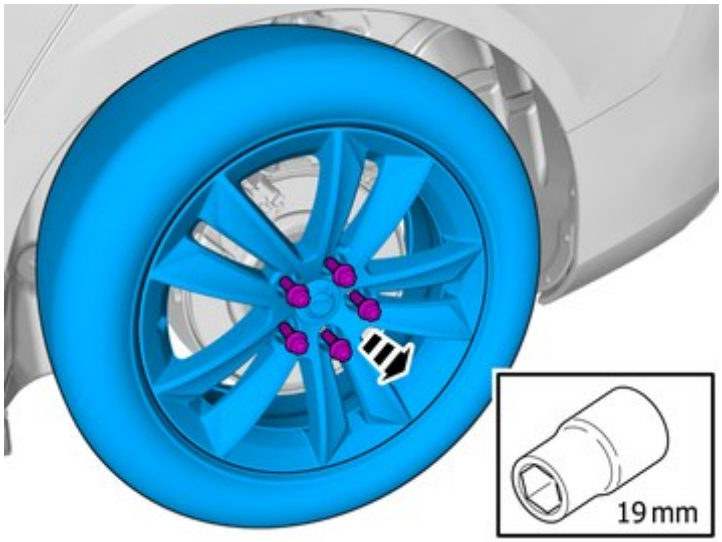

IMG-441820

Remove the marked part.

Removal

5

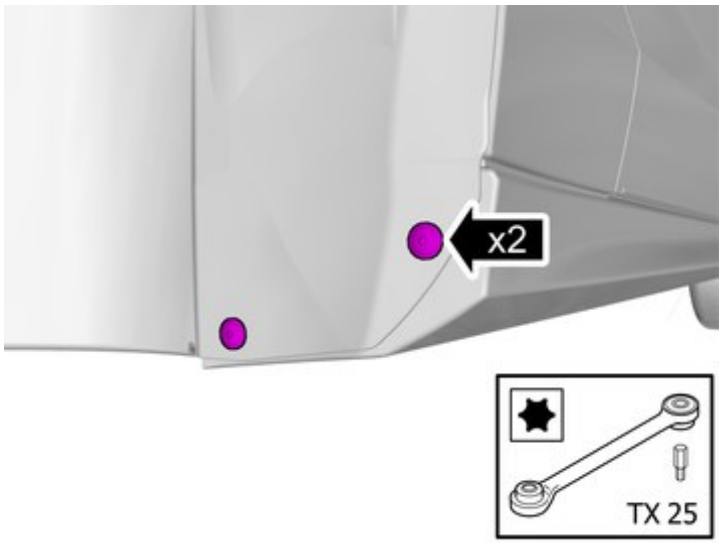

IMG-441631

Remove the screws.

6

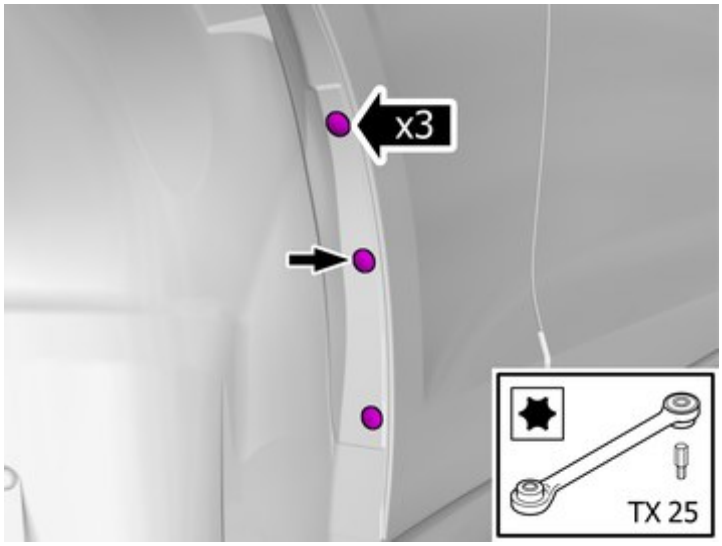

IMG-441779

Remove the screws.

Preparation

7

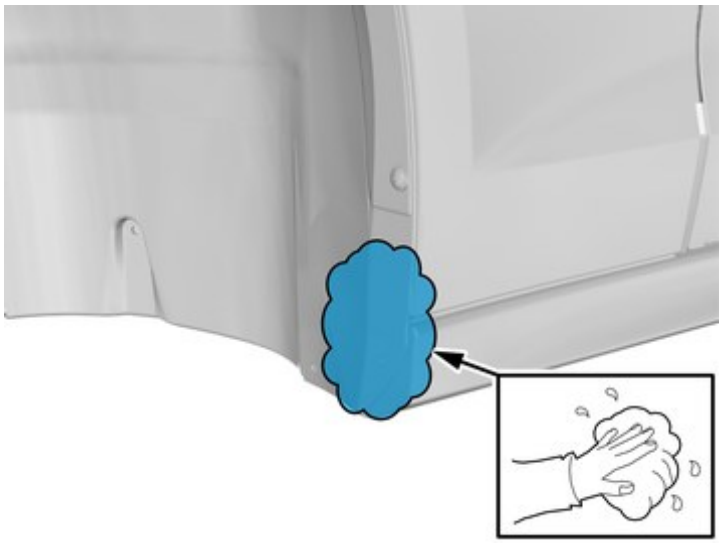

IMG-441633

Clean the surfaces.

8

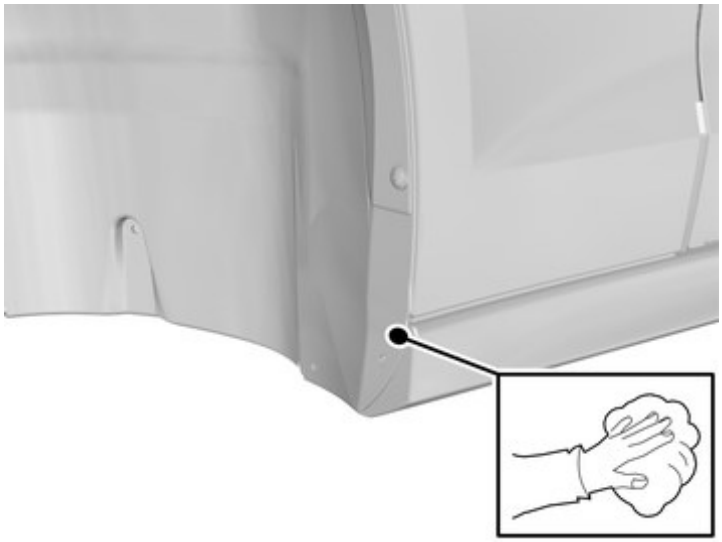

IMG-441634

Wipe dry.

9

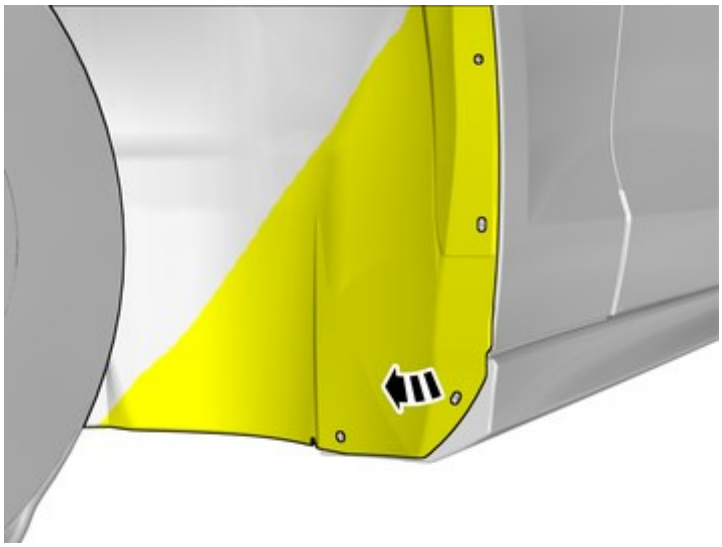

IMG-441780

Fold marked part aside.

Accessory installation

10

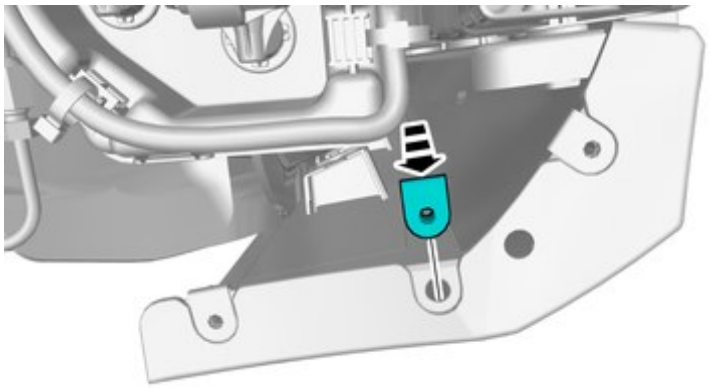

IMG-441860

Install component that comes with the accessory kit.

11

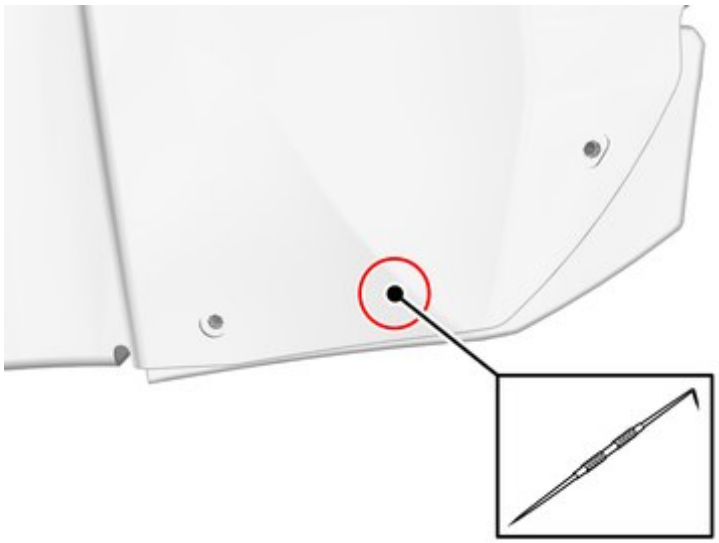

IMG-441853

Locate the existing holes.

Make a hole, using the tool indicated.

12

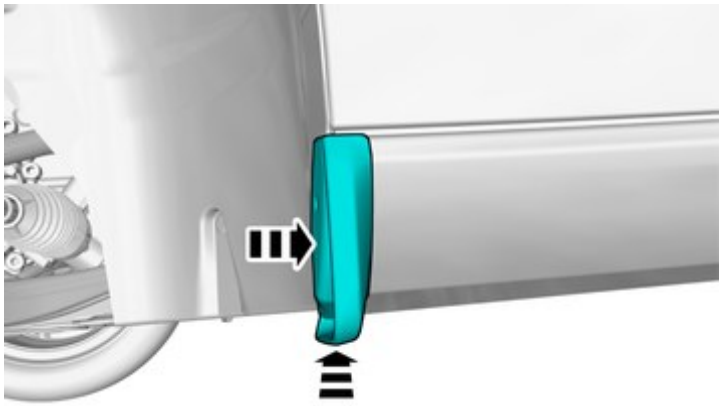

IMG-441863

Install components that come with the accessory kit.

13

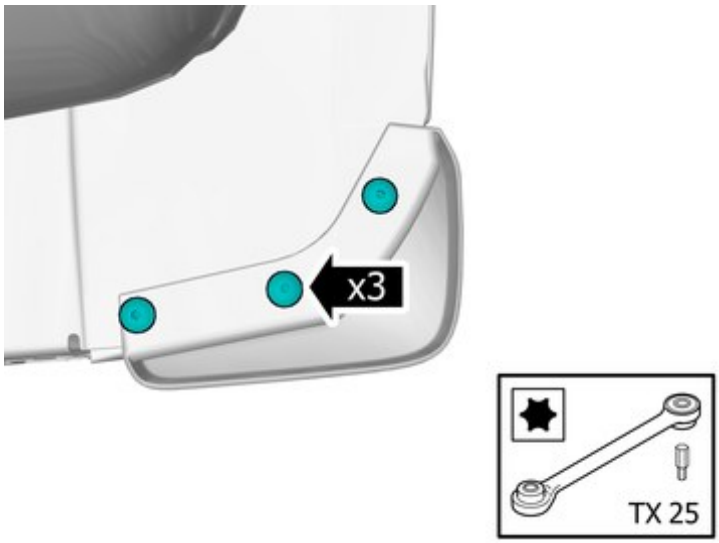

IMG-441864

Note!
Ensure that the component is in contact with the surface, with no space.

Install component that comes with the accessory kit.

14

Reinstall the removed parts in reverse order.

15

Repeat all method steps for the other side.