Installation instructions, accessories

Volvo Car Corporation Gothenburg, Sweden

Instruction No	Version	Part. No.
31399623	1.0	31399203

Sun curtain

Equipment

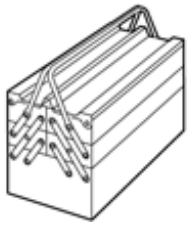

IMG-345497

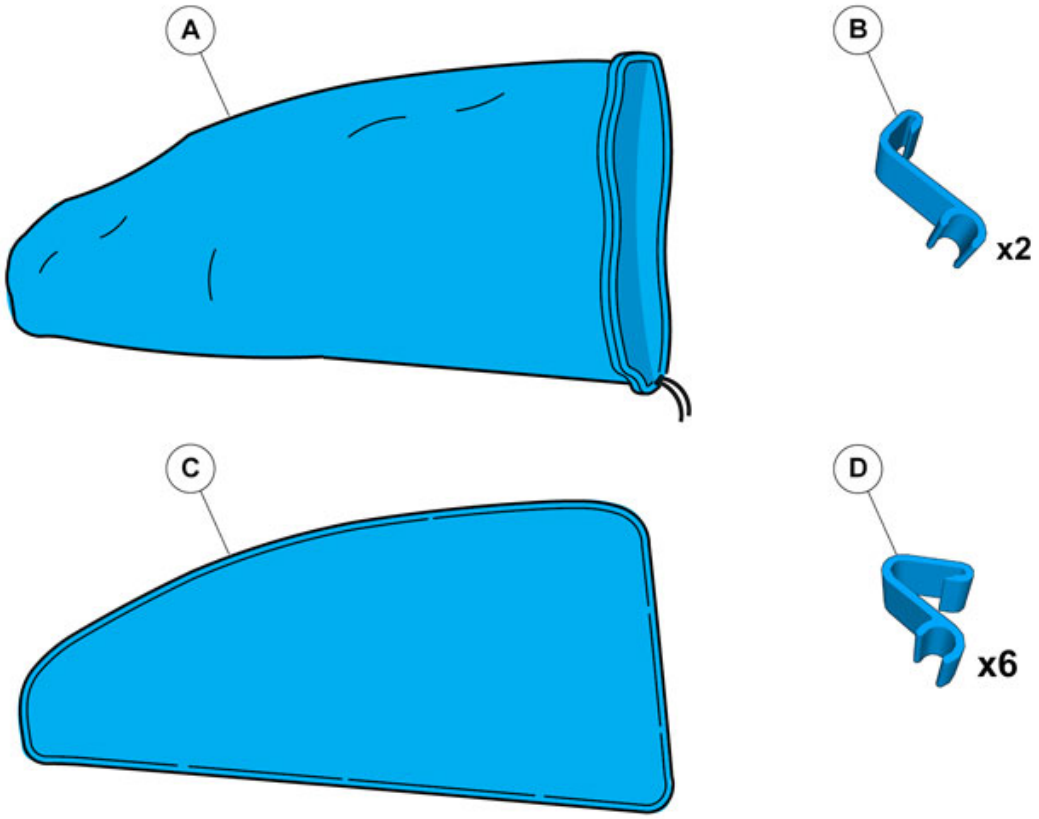

IMG-379618

Information

1

Read through all of the instructions before starting installation.

Notifications and warning texts are for your safety and to minimise the risk of something breaking during installation.

Ensure that all tools stated in the instructions are available before starting installation.

Certain steps in the instructions are only presented in the form of images. Explanatory text is also given for more complicated steps.

In the event of any problems with the instructions or the accessory, contact your local Volvo dealer.

Color symbols

2

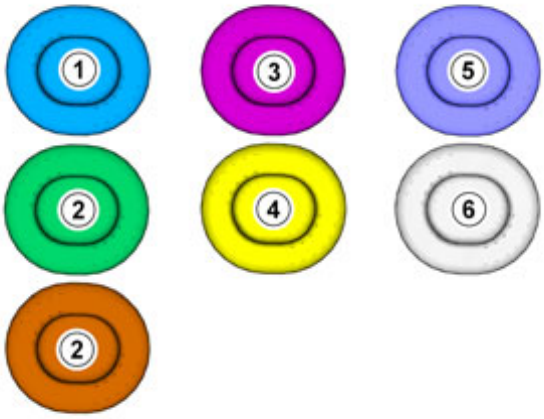

IMG-363036

Note!
This colour chart displays (in colour print and electronic version) the importance of the different colours used in the images of the method steps.

1. Used for focused component, the component with which you will do something.
2. Used as extra colors when you need to show or differentiate additional parts.
3. Used for attachments that are to be removed/installed. May be screws, clips, connectors, etc.
4. Used when the component is not fully removed from the vehicle but only hung to the side.
5. Used for standard tools and special tools.
6. Used as background color for vehicle components.

Accessory installation

3

Set the ignition key to position I.

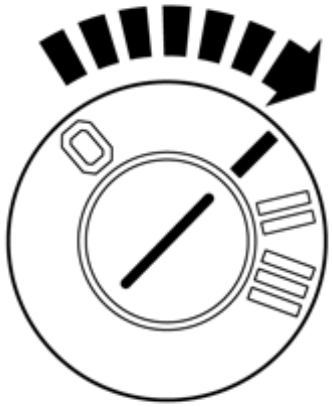

IMG-332194

4

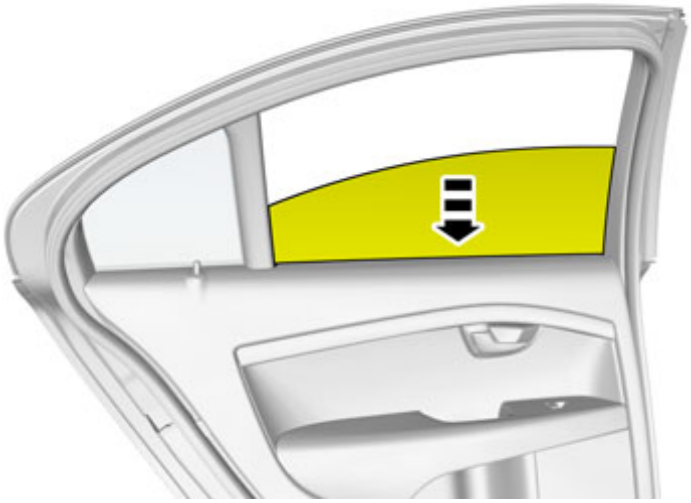

IMG-379619

5

Set the ignition key to position 0.

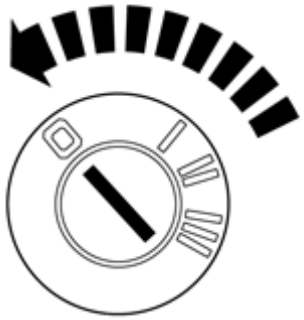

IMG-245980

6

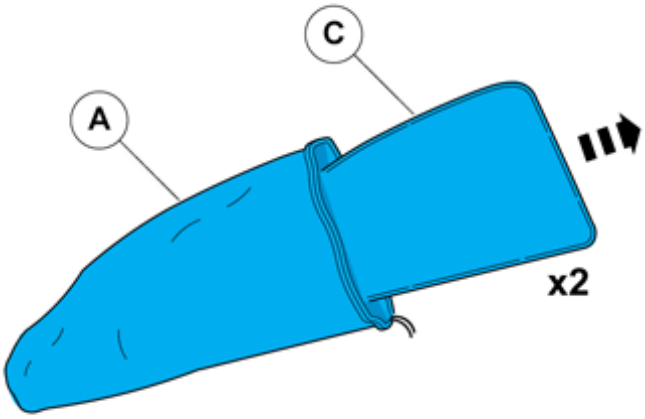

IMG-379621

7

IMG-379622

Note!
Orientation view

8

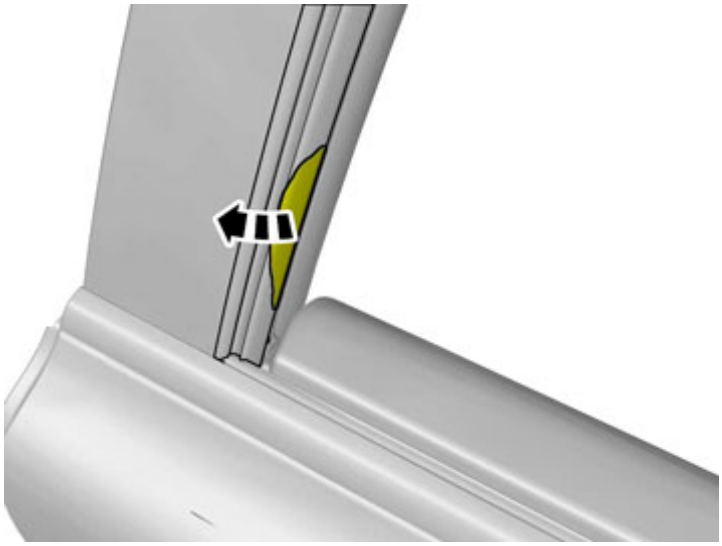

IMG-379624

9

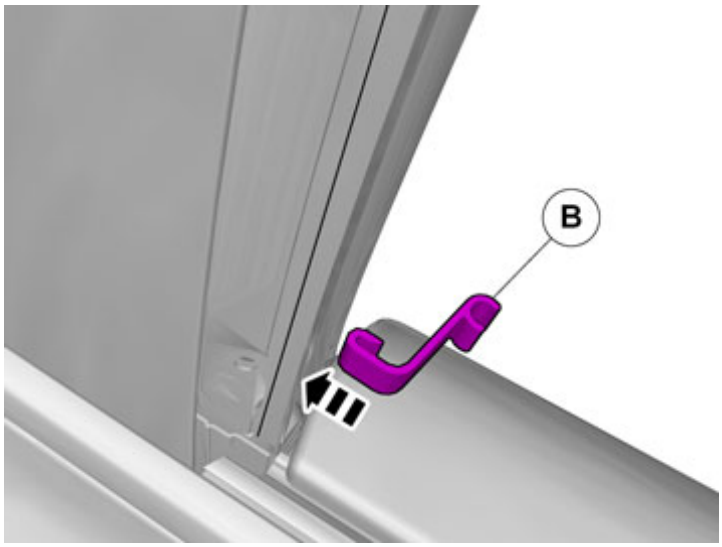

IMG-379630

Install the clip(s).

10

IMG-379633

11

IMG-379634

12

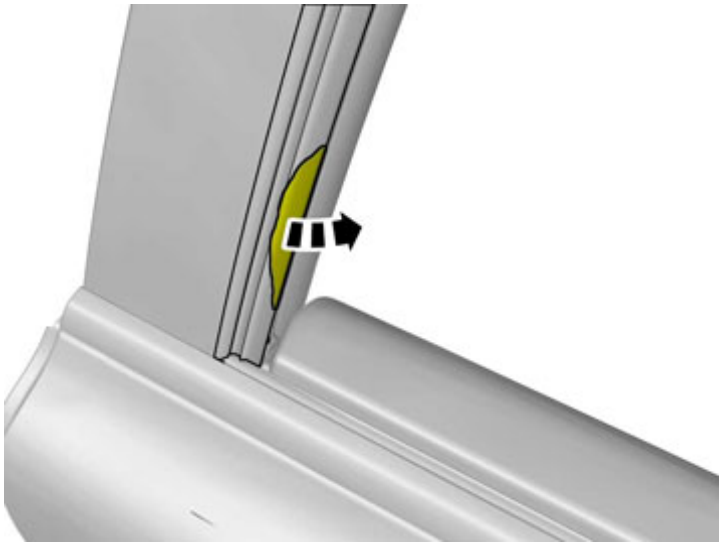

IMG-379651

13

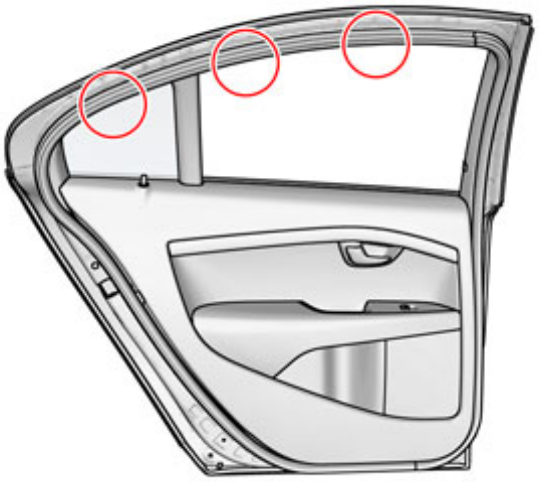

IMG-379636

Note!
Orientation view

14

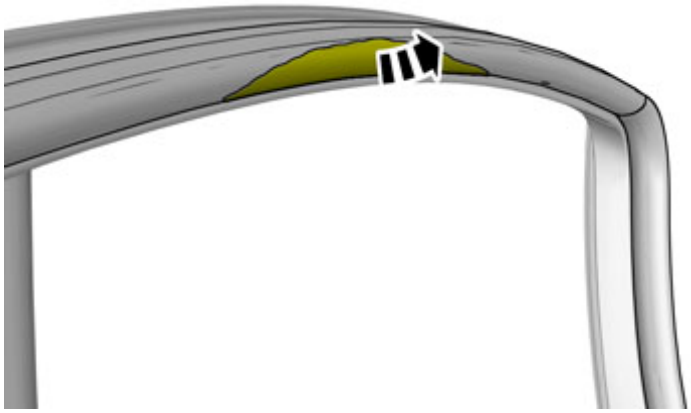

IMG-379638

15

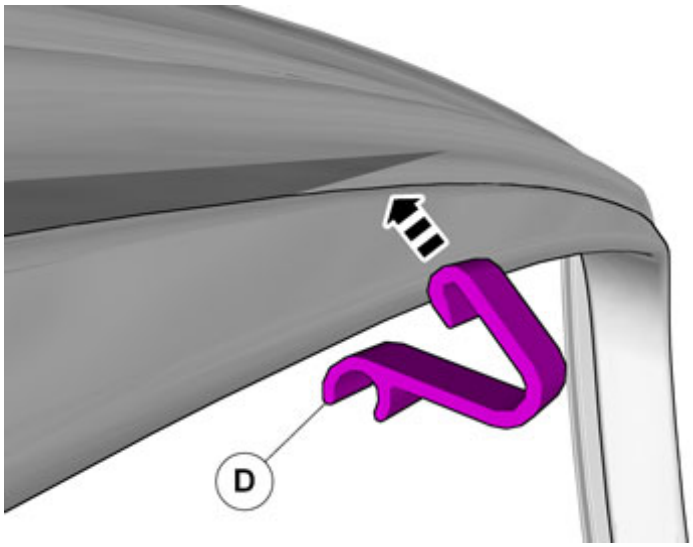

IMG-379640

Install the clip(s).

16

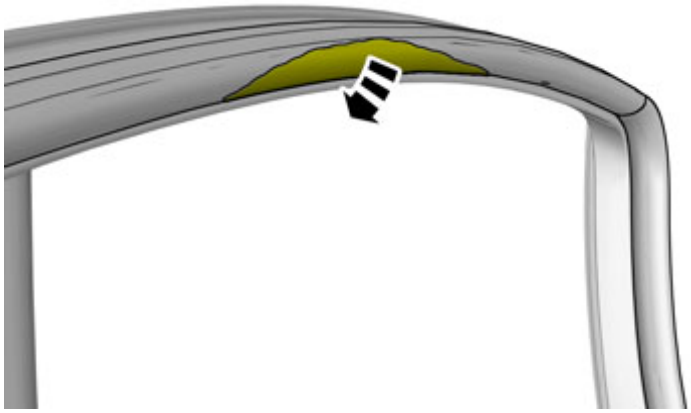

IMG-379652

17

Set the ignition key to position I.

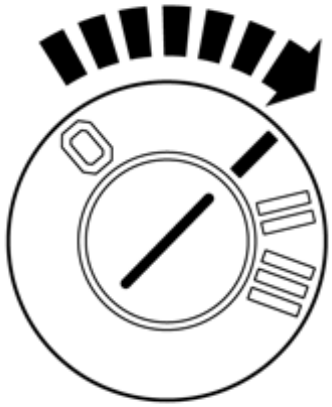

IMG-332194

18

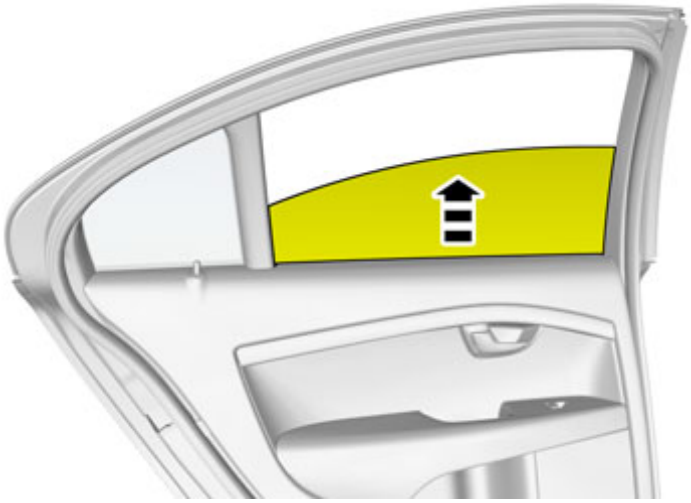

IMG-379620

19

Set the ignition key to position 0.

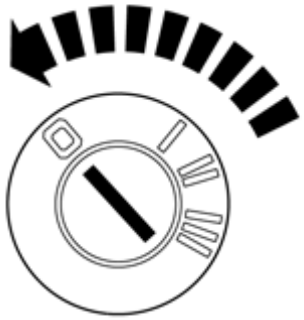

IMG-245980

20

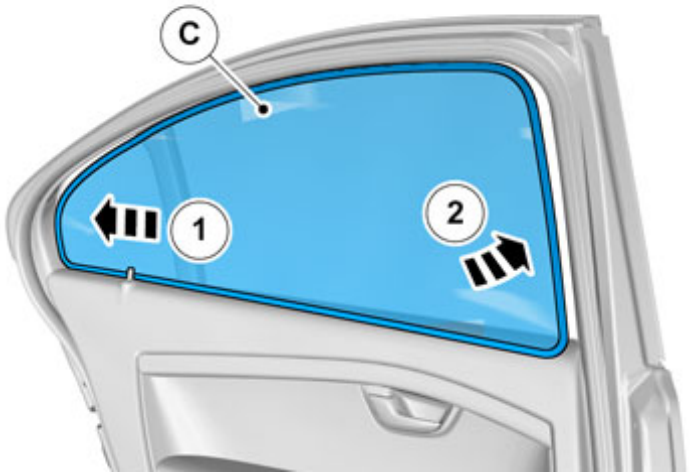

IMG-379648

21

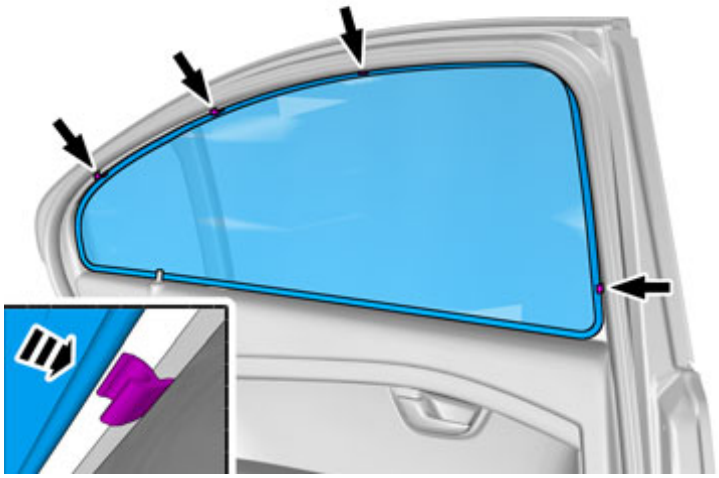
IMG-379650

Repeat all method steps for the other side.

© Volvo Car Corporation