Installation instructions, accessories

Volvo Car Corporation Gothenburg, Sweden

Instruction No	Version	Part. No.
31330497	1.0	39818277, 39818279, 39818280, 39818281, 39818285, 39818286, 39818287, 39818288, 39818292, 39818293, 39818294, 39818295, 31330496, 39818296, 39822049

Side scuff plate

Materials	
Designation	Part number
soap solution	

Equipment

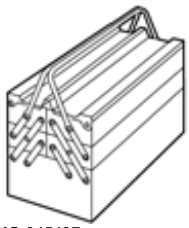

IMG-345497

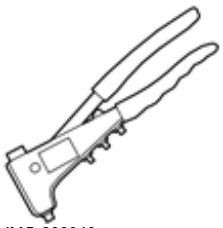

IMG-239940

IMG-239660

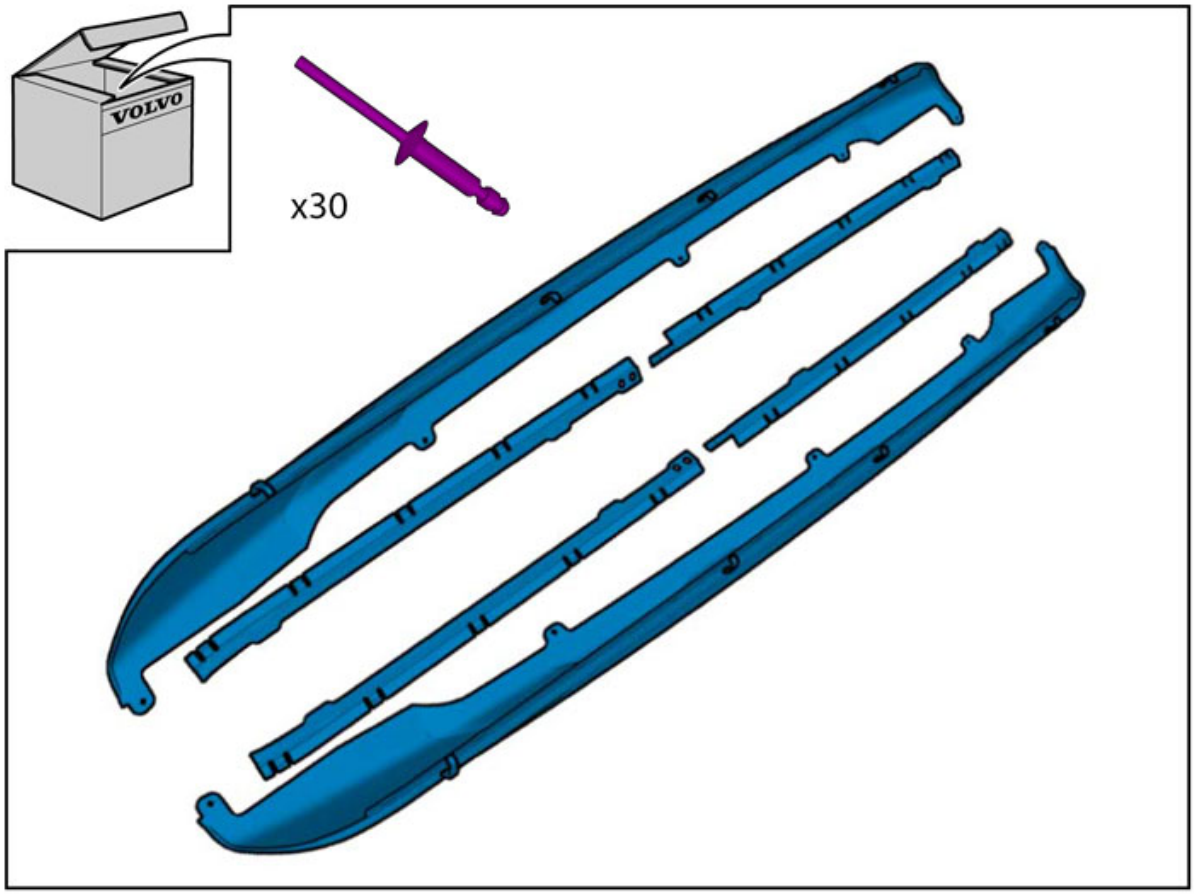

IMG-355877

	Information
1	Read through all of the instructions before starting installation. Notifications and warning texts are for your safety and to minimise the risk of something breaking during installation. Ensure that all tools stated in the instructions are available before starting installation. Certain steps in the instructions are only presented in the form of images. Explanatory text is also given for more complicated steps. In the event of any problems with the instructions or the accessory, contact your local Volvo dealer.
	Color symbols
2	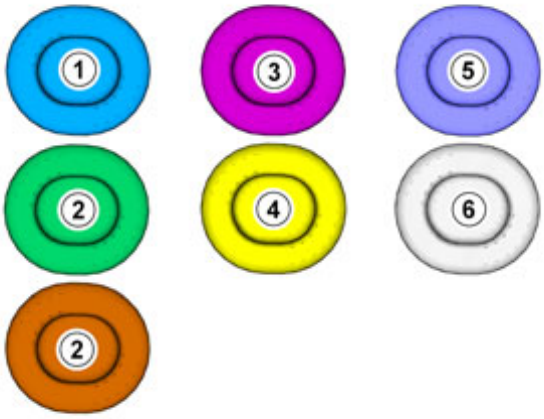 IMG-363036 **Note!** This colour chart displays (in colour print and electronic version) the importance of the different colours used in the images of the method steps. 1. Used for focused component, the component with which you will do something. 2. Used as extra colors when you need to show or differentiate additional parts. 3. Used for attachments that are to be removed/installed. May be screws, clips, connectors, etc. 4. Used when the component is not fully removed from the vehicle but only hung to the side. 5. Used for standard tools and special tools. 6. Used as background color for vehicle components.
	Accessory installation

3

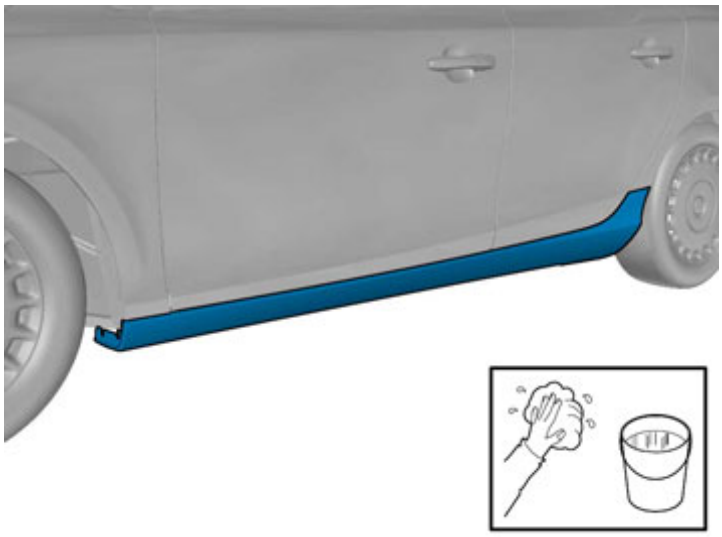

IMG-355878

4

Remove the protective film.

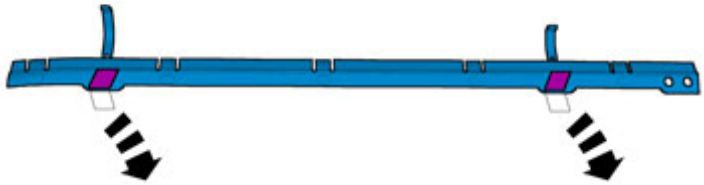

IMG-355880

5

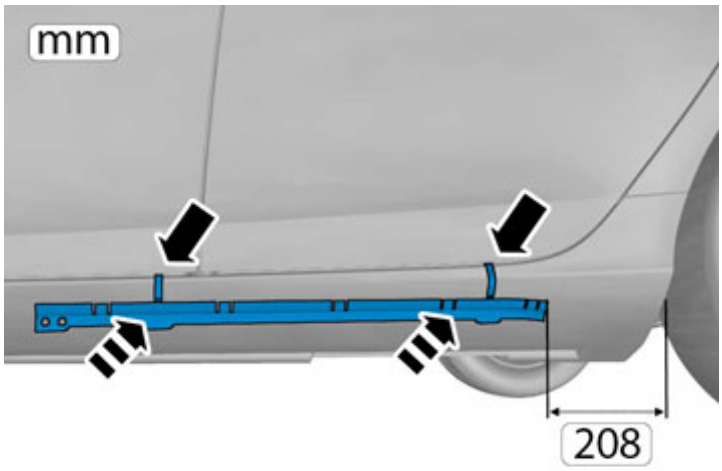

IMG-355881

6

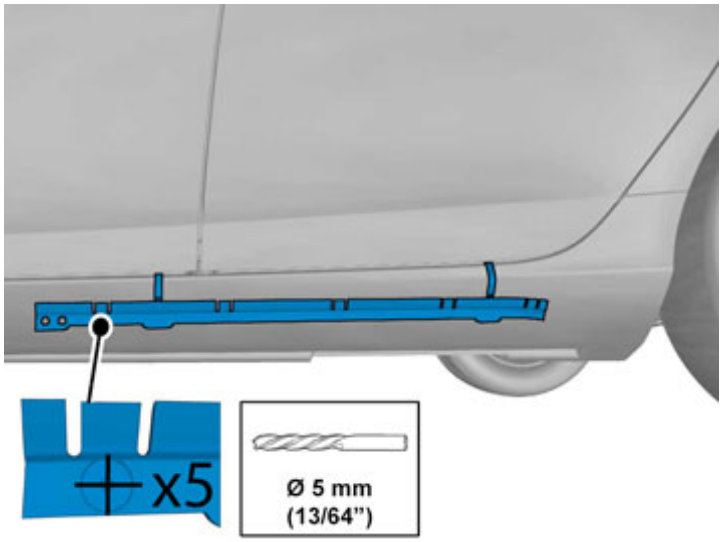

IMG-355883

Drill the holes.

7

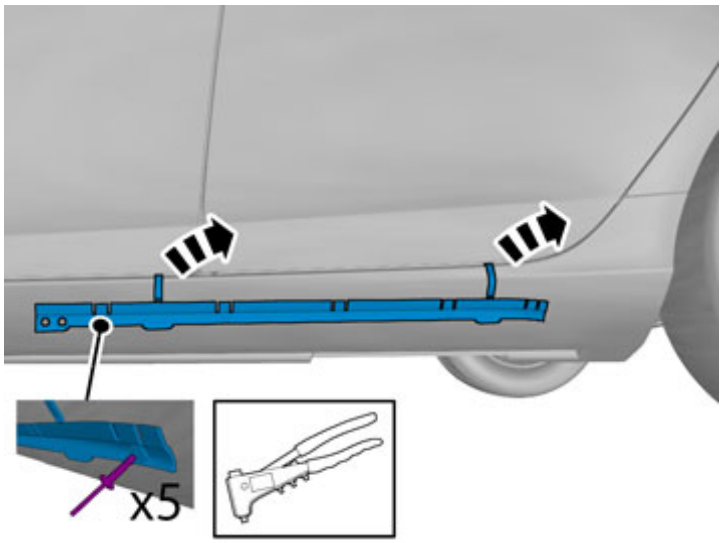

IMG-355884

8

Remove the protective film.

IMG-355879

9

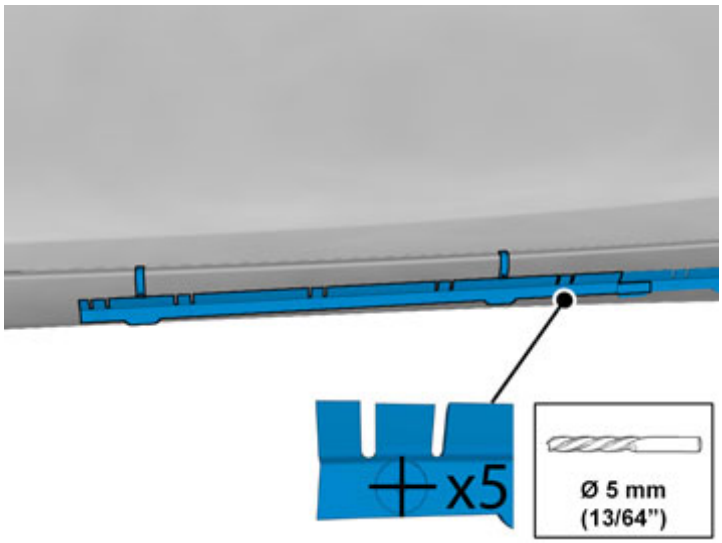

IMG-355886

10

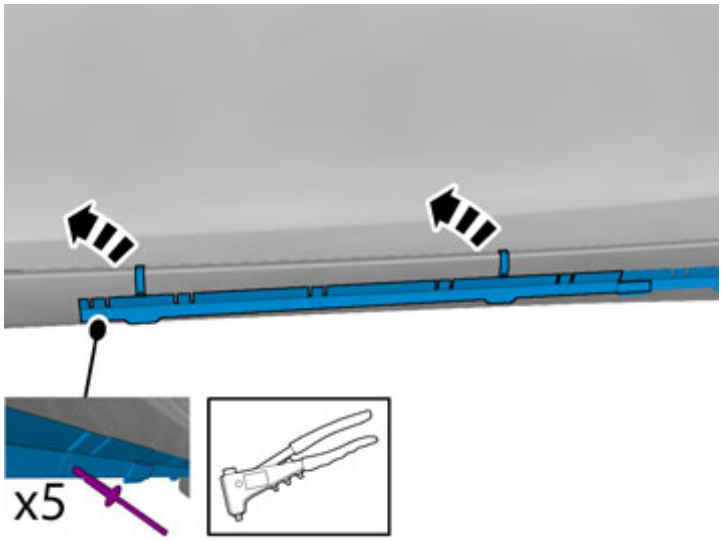

IMG-355887

11

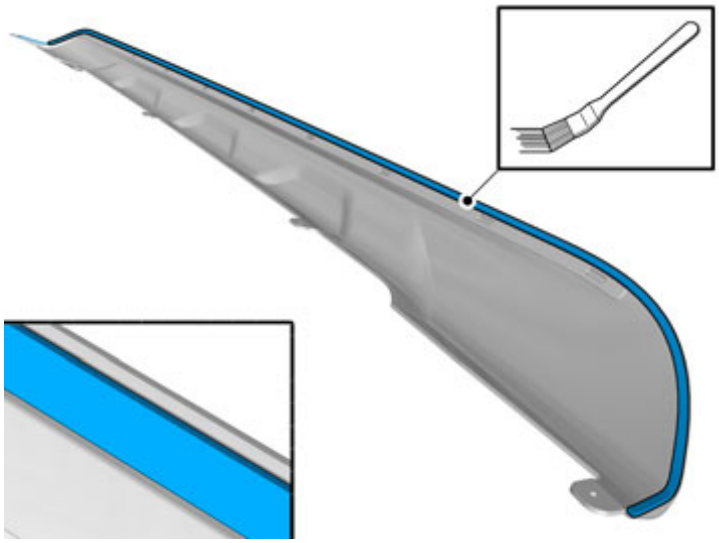

IMG-371640

Use: , soap solution

12

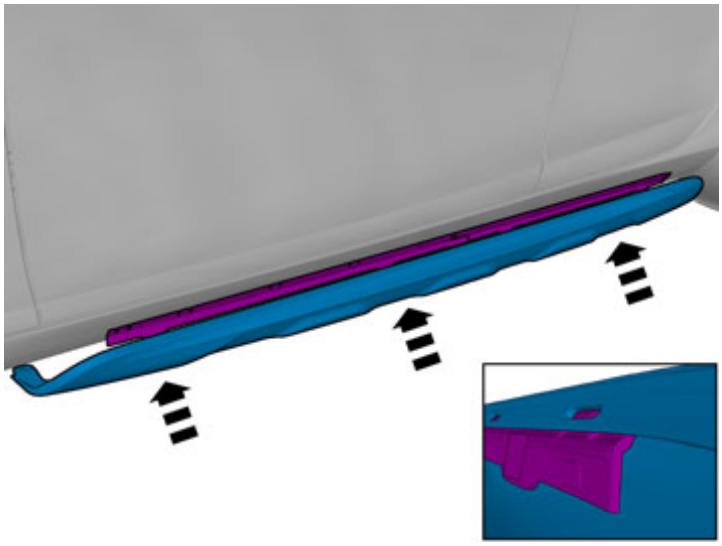

IMG-355888

13

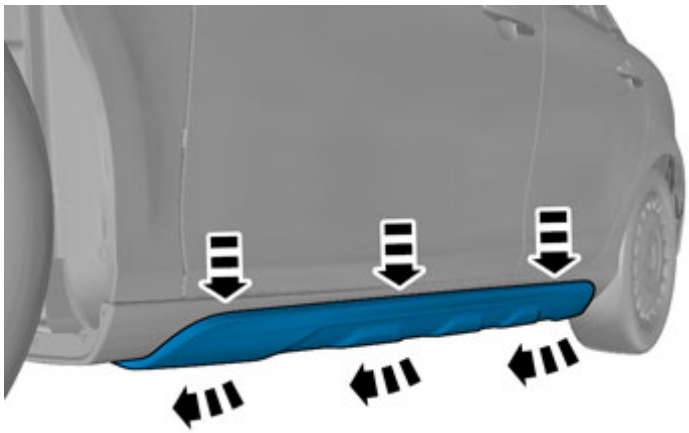

IMG-355889

14

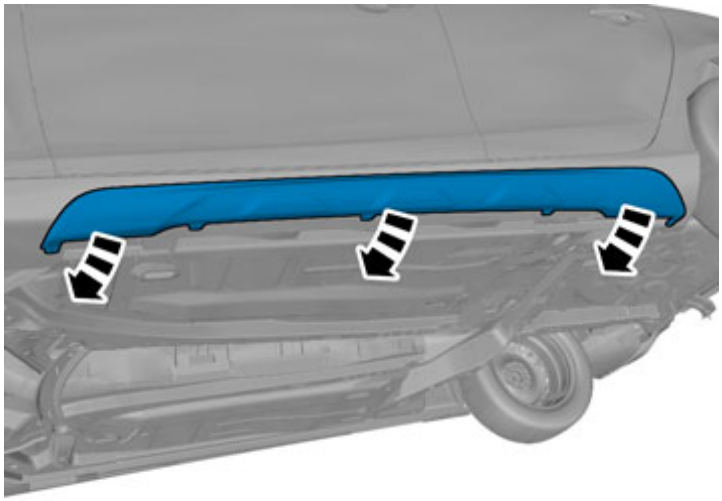

IMG-355890

15

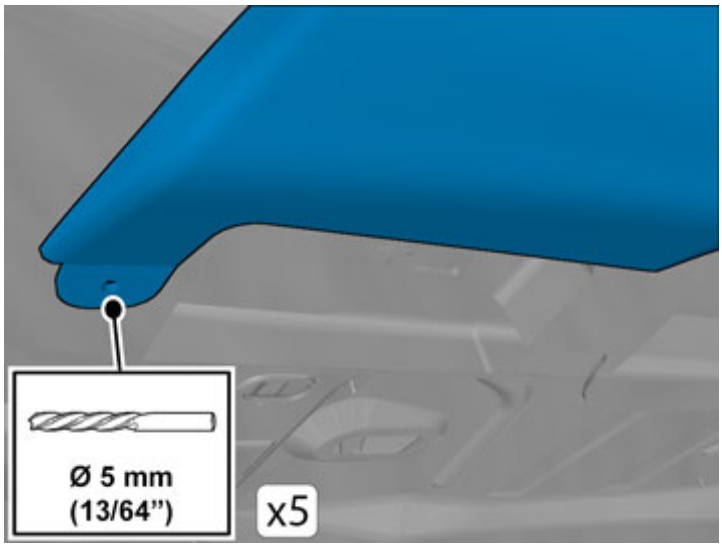

IMG-355891

16

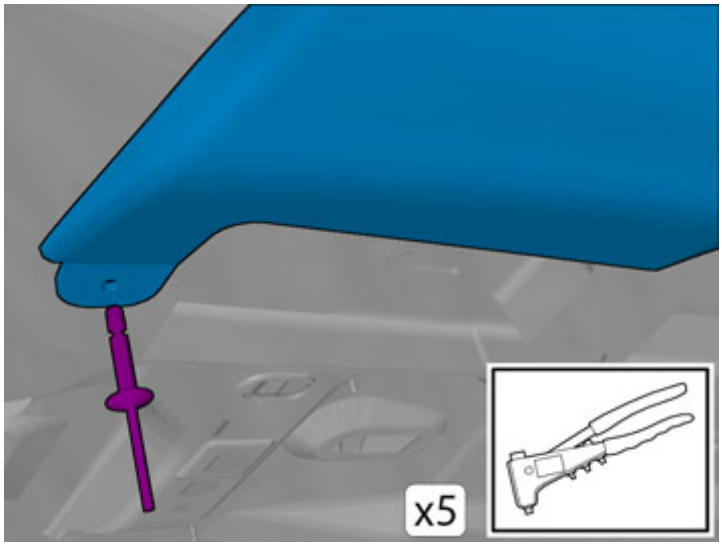

IMG-355892

Repeat all method steps for the other side.