Installation instructions, accessories

Volvo Car Corporation Gothenburg, Sweden

Instruction No	Version	Part. No.
31214933	1.2	39861739, 39861737, 39861710, 39861708, 39861694, 39861706, 39861704, 39861700, 39861692, 39861690, 39861686, 39861684

Spoiler, boot lid

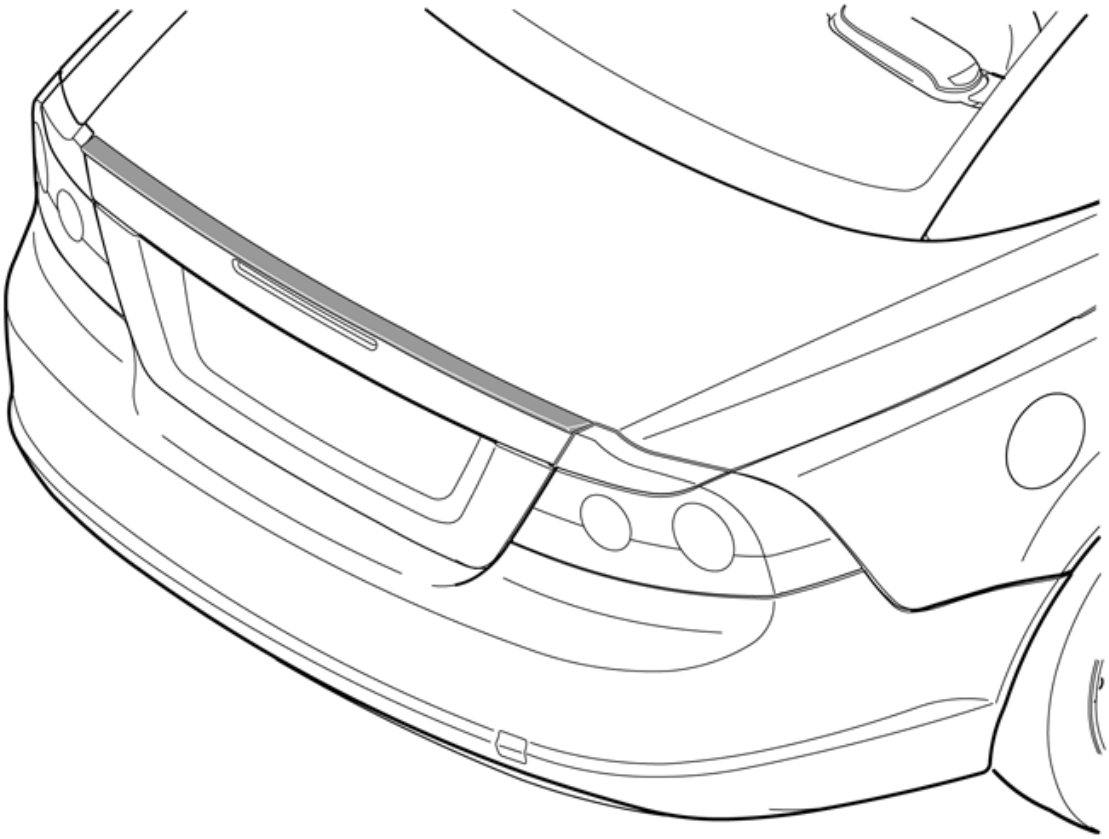

IMG-286344

Equipment

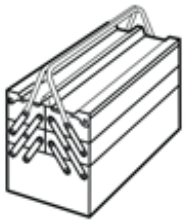

A0000162

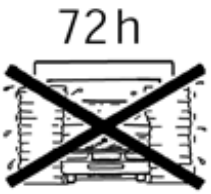

IMG-251688

J8401173

IMG-254087

© Volvo Car Corporation

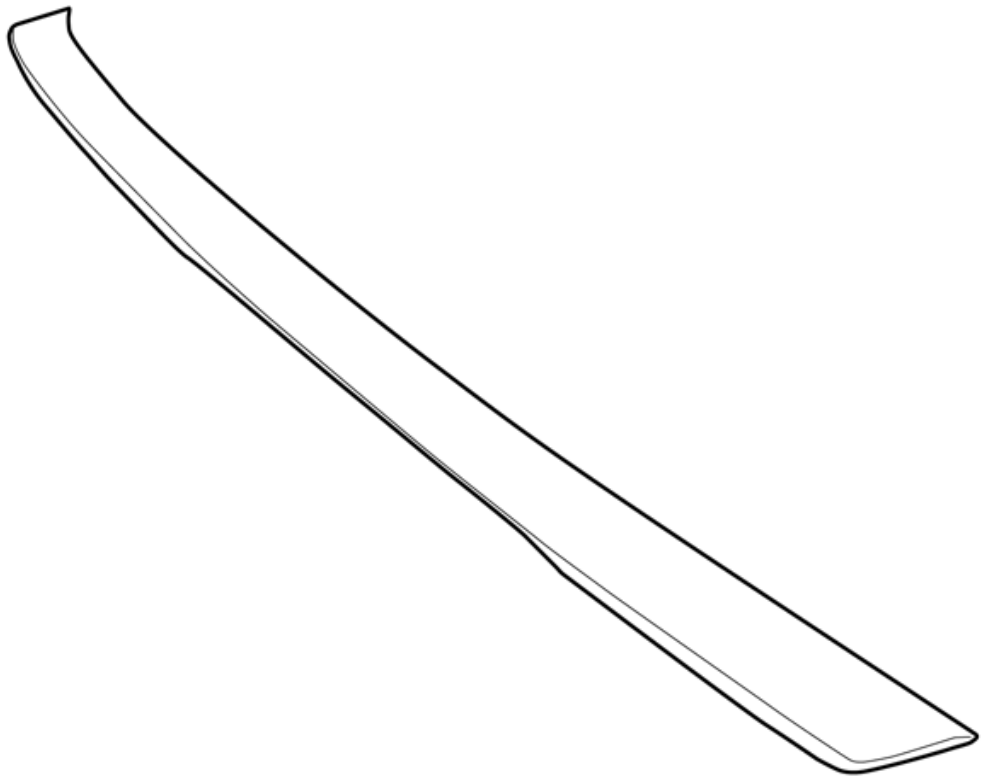

IMG-286004

Any comments on this publication? Please contact your nearest retailer. Thank You!

Publ.no:	Issue:	Kit no:

Comments:.....

.....

.....

.....

From:	
Address:	
Telephone:	
Telefax:	

IMG-213320

INTRODUCTION

Read through all of the instructions before starting installation.

Notifications and warning texts are for your safety and to minimise the risk of something breaking during installation.

Ensure that all tools stated in the instructions are available before starting installation.

Certain steps in the instructions are only presented in the form of images. Explanatory text is also given for more complicated steps.

In the event of any problems with the instructions or the accessory, contact your local Volvo dealer.

Note!

Do not carry out the work at temperatures below 16° (61°F).

Preparations

1

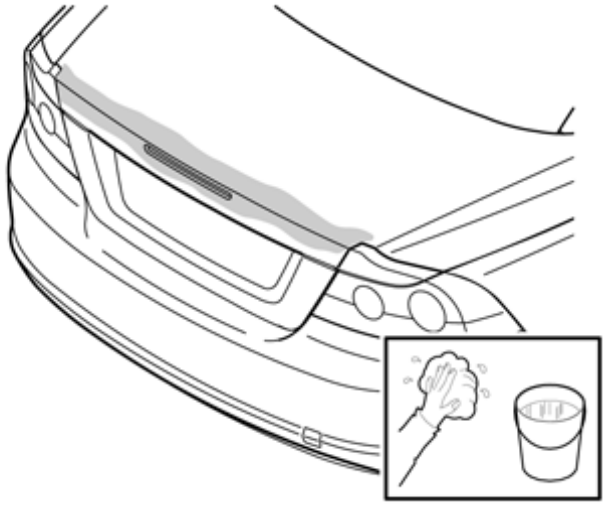

IMG-286323

Preparations

Wash the marked area on the boot lid and its rear panel.

Wipe dry.

2

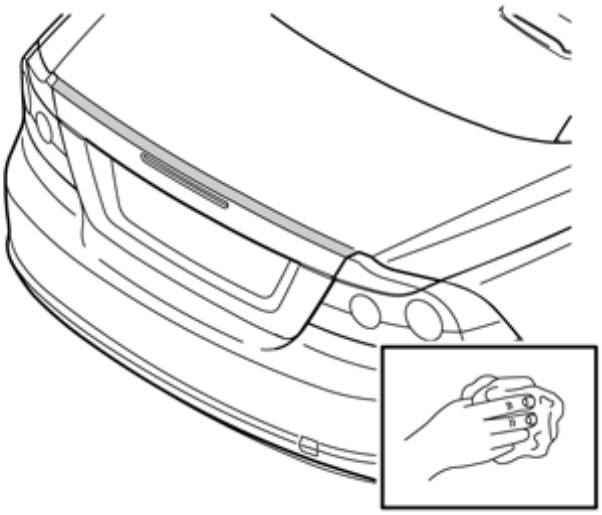

IMG-286324

Clean the marked area on the boot lid panel using isopropanol.

Wipe dry.

3

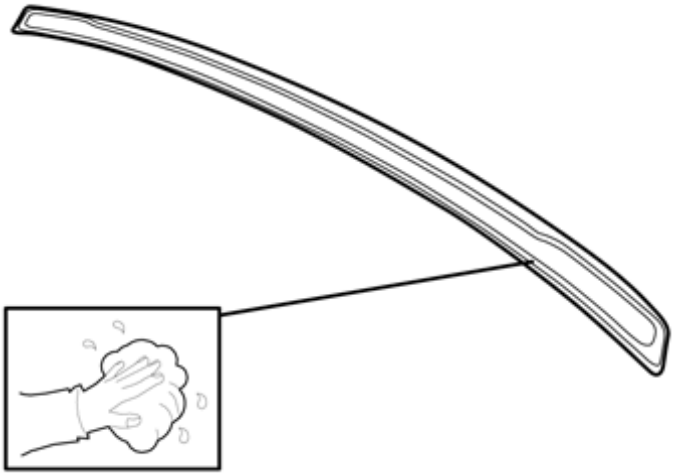

IMG-311343

Wipe clean the protective tape on the spolier's attachment tape before marking up on the boot lid.

4A

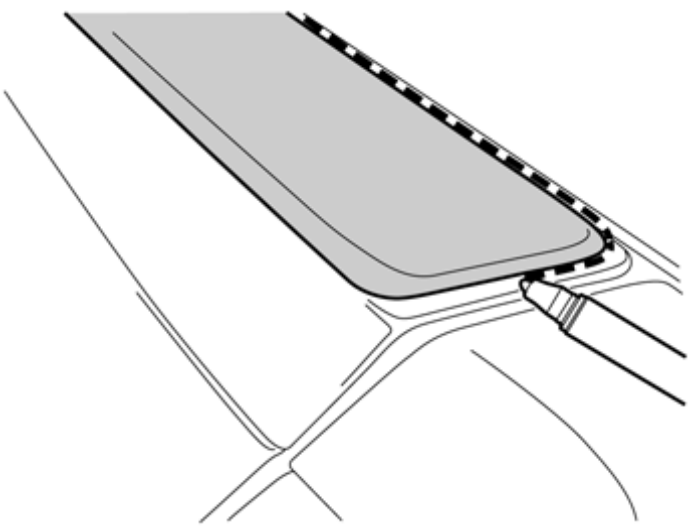

IMG-311345

4B

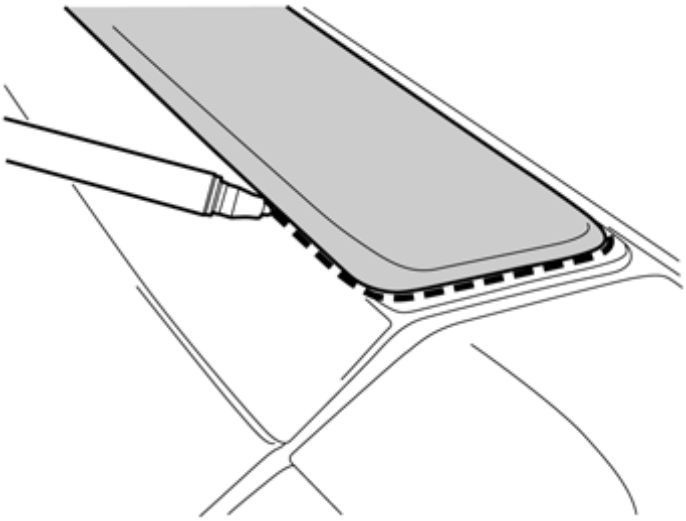

IMG-311346

Illustration A

Illustration B

Request the assistance of a colleague to help mark out the position of the spoiler on the boot lid panel. The spoiler is slightly straighter than the curvature of the boot lid and must, therefore, be bent according to the join between the boot lid and panel in order for the lateral marking to be correct.

Place the spoiler on the boot lid panel. Mark its lateral position and along the entire rear edge using a whiteboard pen. The longitudinal position must be edge-to-edge with the beginning of the panel radius.

5

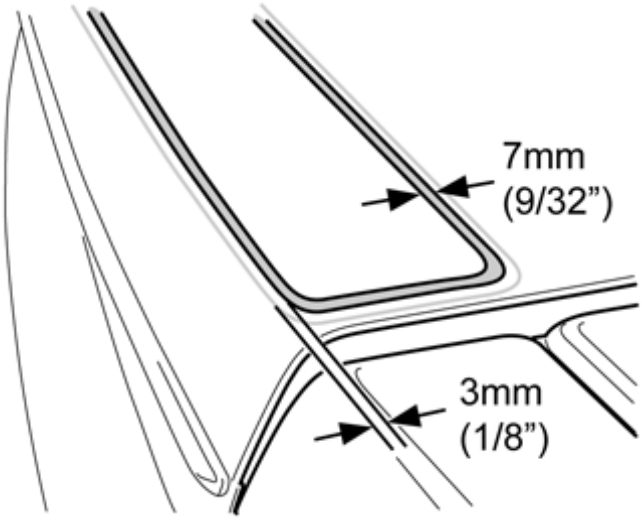

IMG-311364

Apply a 7 mm (9/32") wide bead of primer around the boot lid panel, 3 mm (1/8") in front of the drawn lines and the joint between the boot lid and its panel.

Ensure that no primer comes into contact with other surfaces, if it does, clean with isopropanol.

6

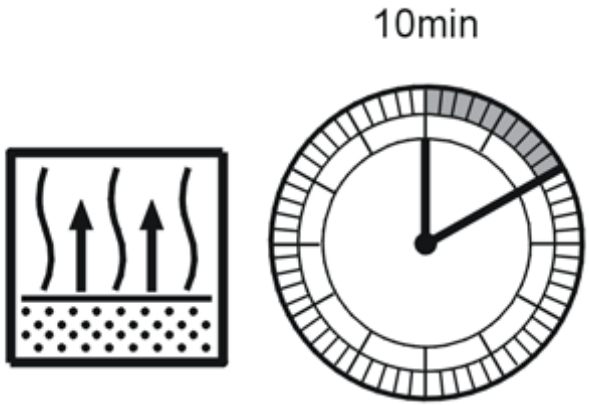

J8401215

Allow the primer to dry for 10 minutes.

7

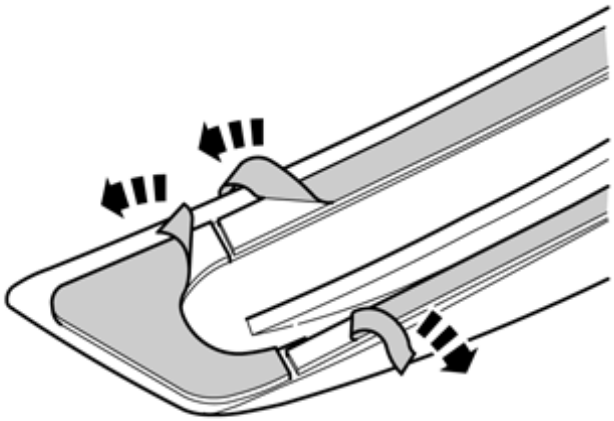

IMG-286052

Fold out the loose ends of the protective tape at both ends of the spoiler.

8

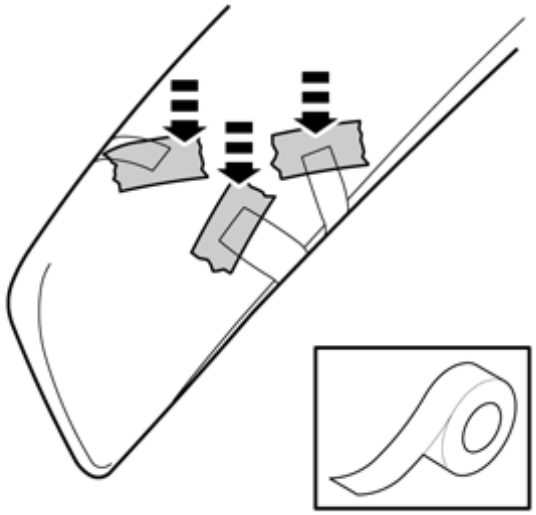

IMG-286053

Tape up the protective tape ends on top of the spoiler to facilitate pulling it off when the spoiler is attached. Carry out at both ends.

Installation

9

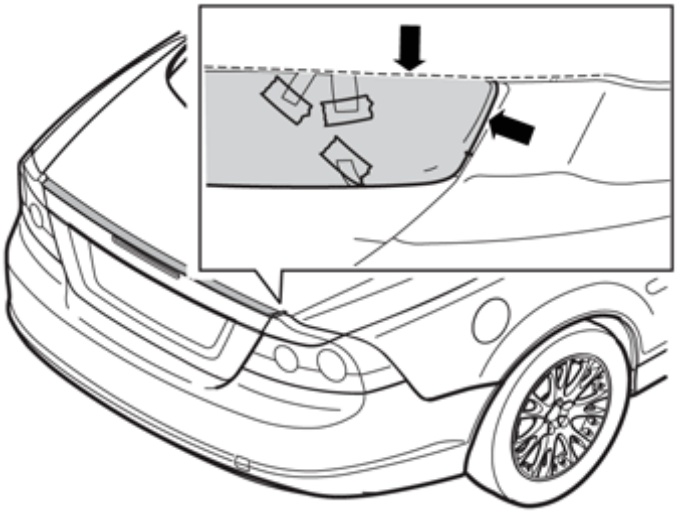

IMG-286327

Installation

Hint

Two technicians are required to carry out steps 9-10.

Carefully move the spoiler towards the boot lid panel. Position one side edge-to-edge at the beginning of the radius on the front edge of the panel and at the marking at the side.

10

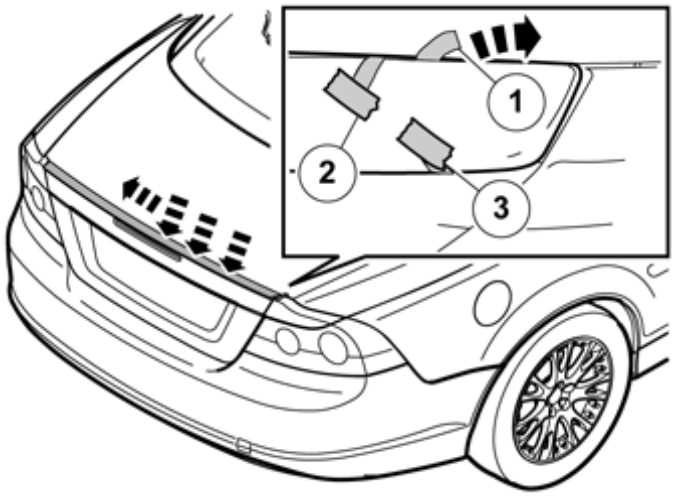

IMG-286328

Carefully pull off the spoiler's protective tape, maintaining the position of the spoiler.

Start pulling the protective tape (1) off, first from the end, then at the front edge (2), then the rear (3) and finally from the other side's end.

Press the spoiler into place when removing the protective tape. Bend the spoiler so that it follows the beginning of the radius on the panel.

Do not press the spoiler too close to where the protective tape is pulled off. If the tape gets stuck, try carefully prying up the spoiler slightly so the tape can be pulled off more easily.

11

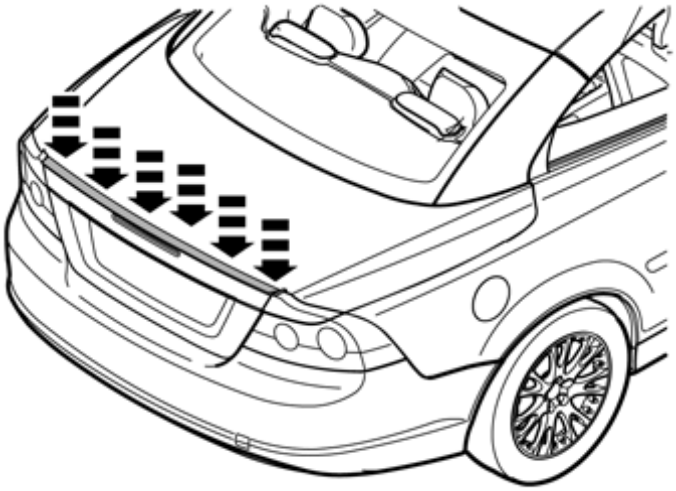

IMG-286329

Press the spoiler so that the tape adheres properly.

Remove the markings.

12

Note!

The vehicle may not be used within 1 hour after carrying out the work.

Note!

Do not wash the vehicle within 72 hours after doing the work.