Installation instructions, accessories

Volvo Car Corporation Gothenburg, Sweden

Instruction No	Version	Part. No.
31316445	1.2	31290544, 31316045

Grille, front

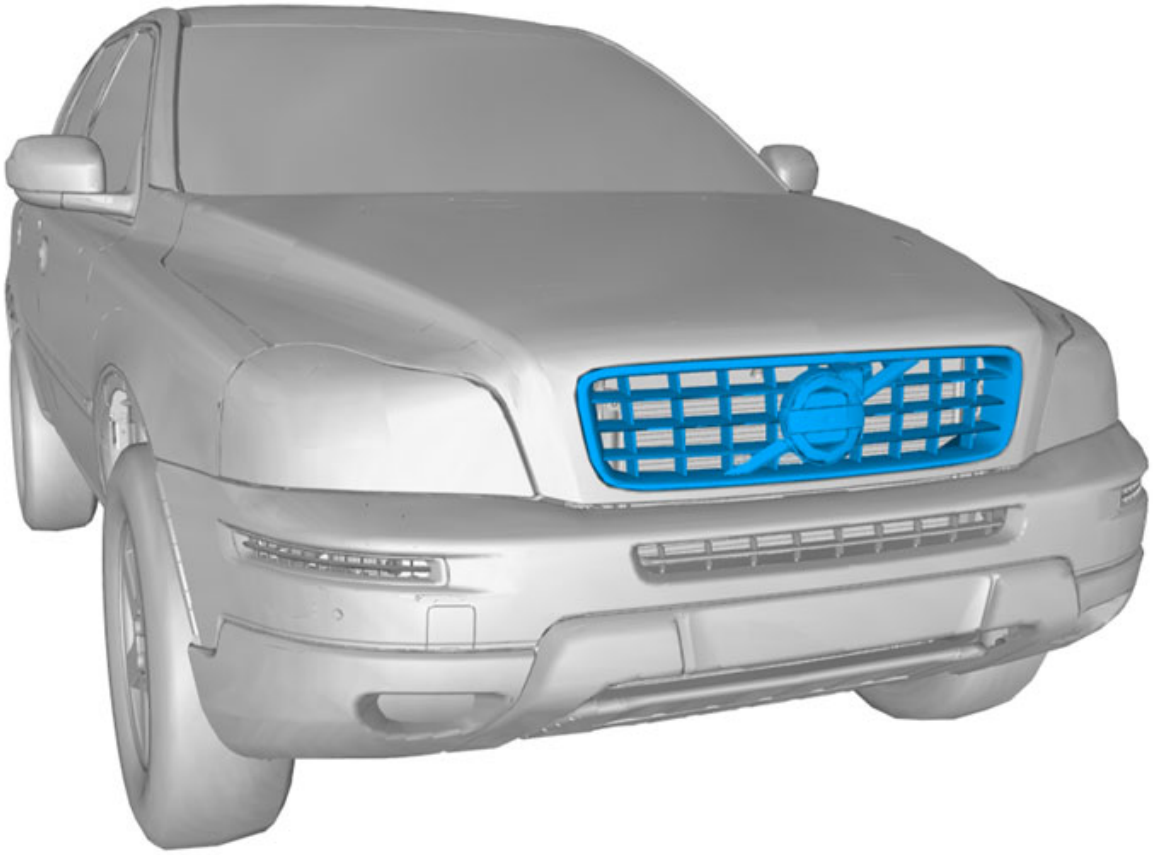

IMG-337577

Equipment

IMG-239667

© Volvo Car Corporation

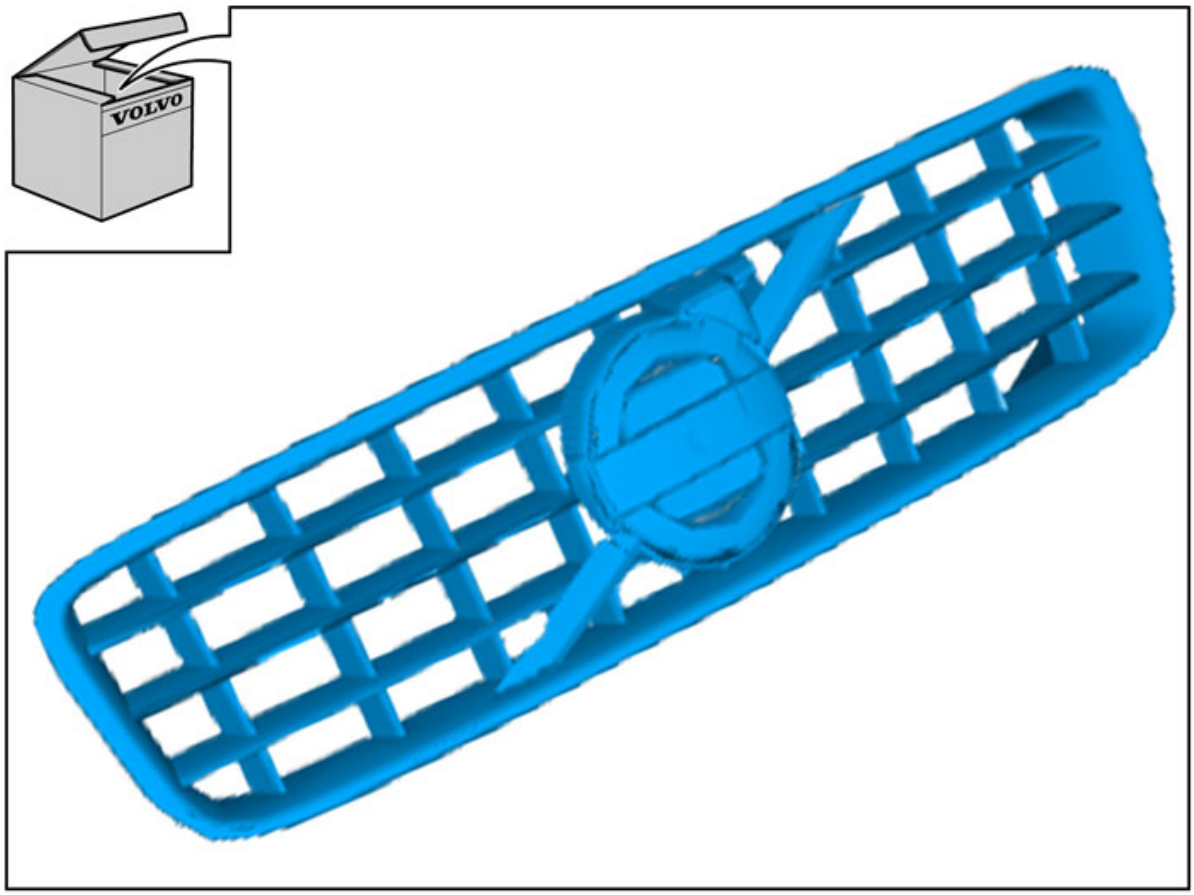

IMG-337576

INTRODUCTION

Read through all of the instructions before starting installation.

Notifications and warning texts are for your safety and to minimise the risk of something breaking during installation.

Ensure that all tools stated in the instructions are available before starting installation.

Certain steps in the instructions are only presented in the form of images. Explanatory text is also given for more complicated steps.

In the event of any problems with the instructions or the accessory, contact your local Volvo dealer.

1

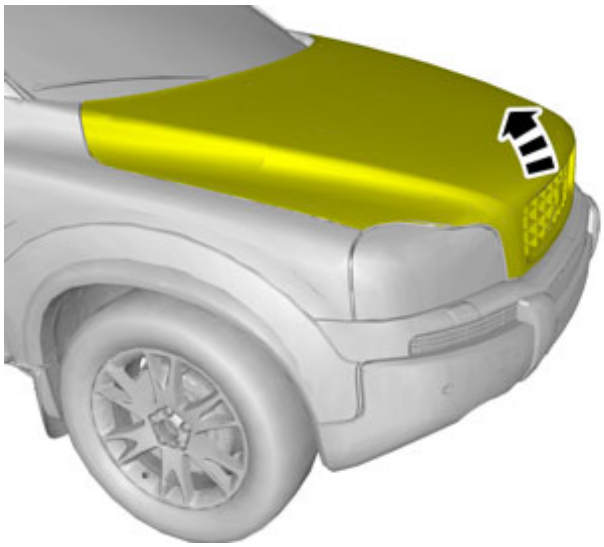

IMG-337573

Open the engine hood.

2

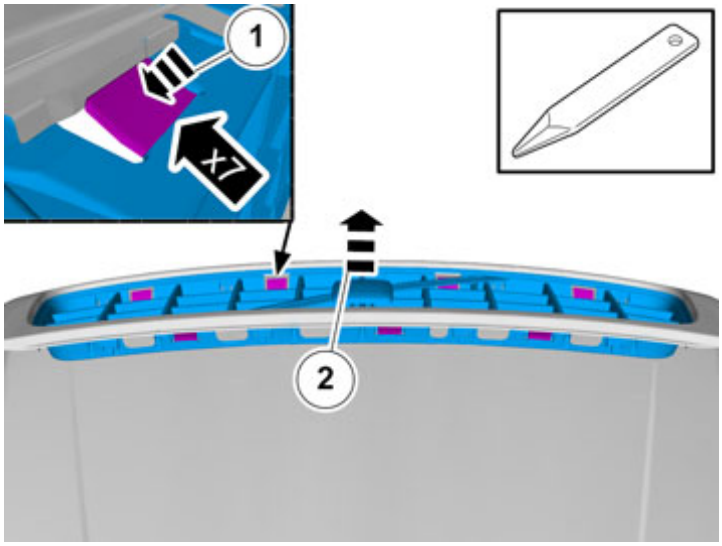

IMG-337574

Release the mounting hooks and pull out the grille.

3

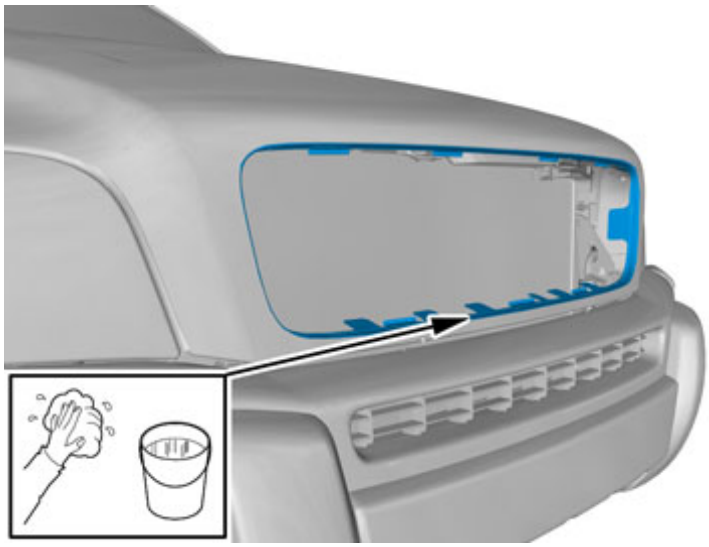

IMG-337575

Clean the area where the old grille was located.

4

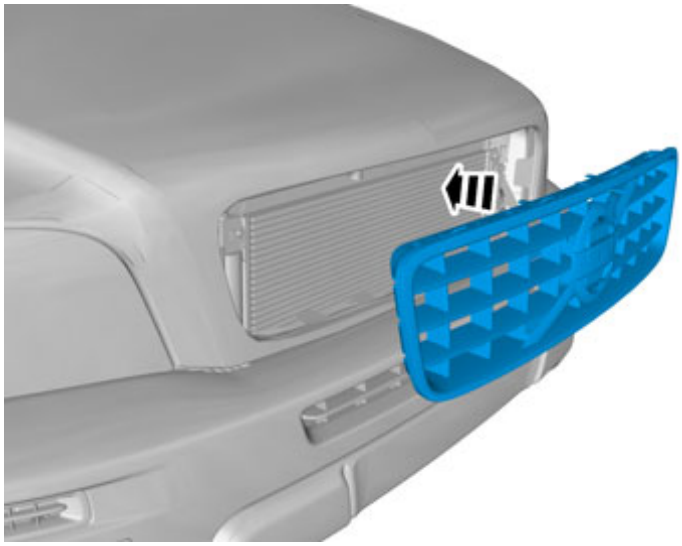

IMG-336661

Take a new grille from the kit. Ensure that all catches engage.

© Volvo Car Corporation