Installation instructions, accessories

Volvo Car Corporation Gothenburg, Sweden

Instruction No	Version	Part. No.
31330084	1.1	30756503, 30756499

Net pocket, tunnel console

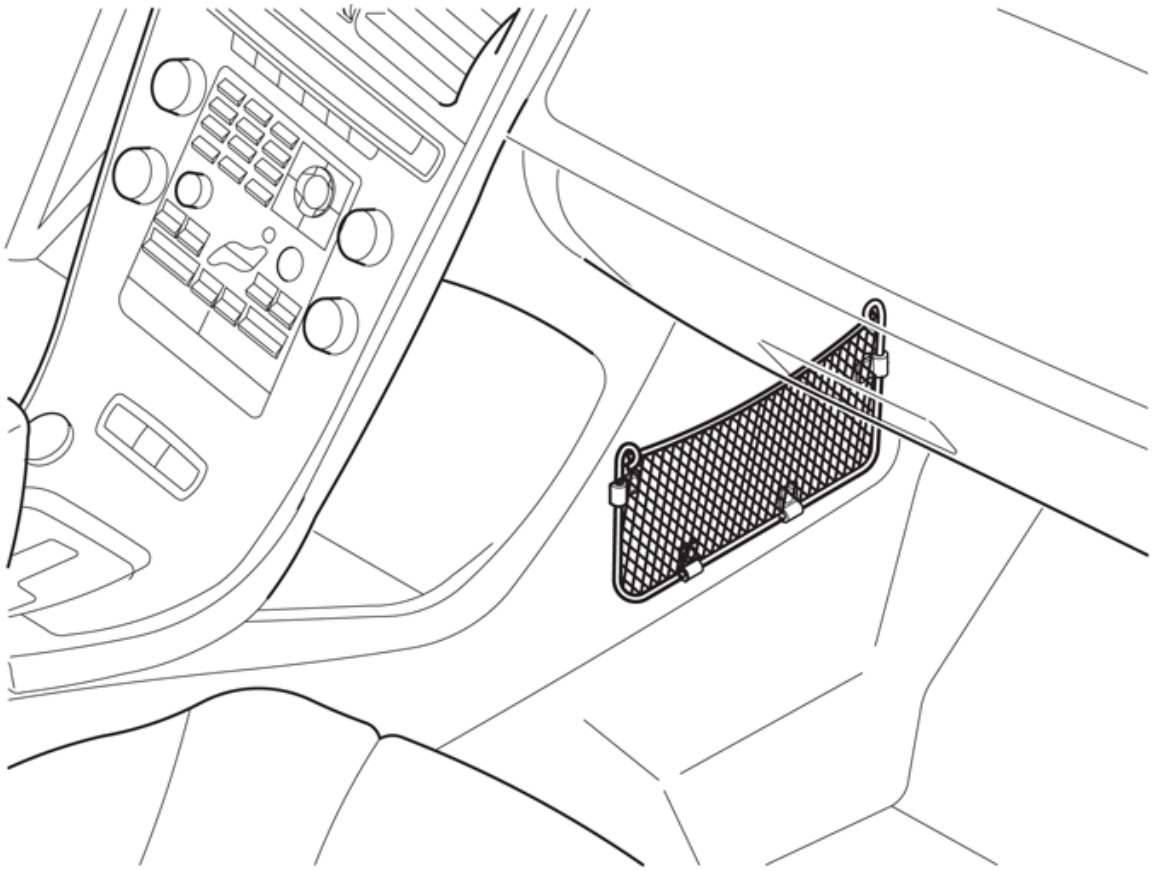

IMG-285729

Equipment

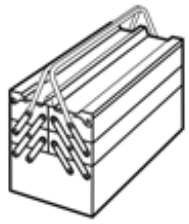

A0000162

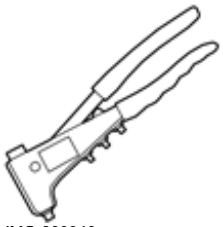

IMG-239940

IMG-239660

IMG-239681

© Volvo Car Corporation

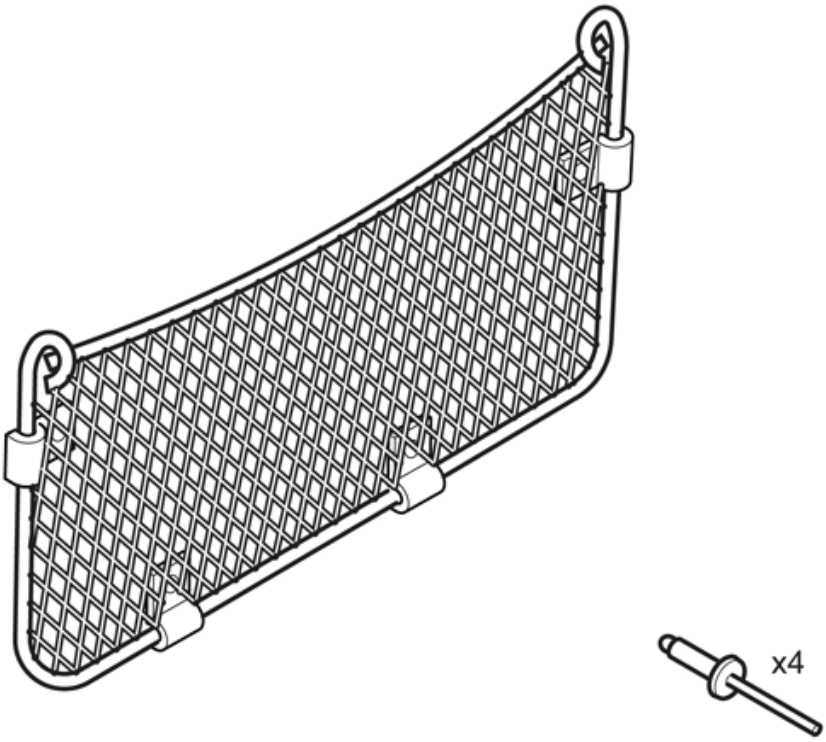

IMG-285730

INTRODUCTION

Read through all of the instructions before starting installation.

Notifications and warning texts are for your safety and to minimise the risk of something breaking during installation.

Ensure that all tools stated in the instructions are available before starting installation.

Certain steps in the instructions are only presented in the form of images. Explanatory text is also given for more complicated steps.

In the event of any problems with the instructions or the accessory, contact your local Volvo dealer.

1

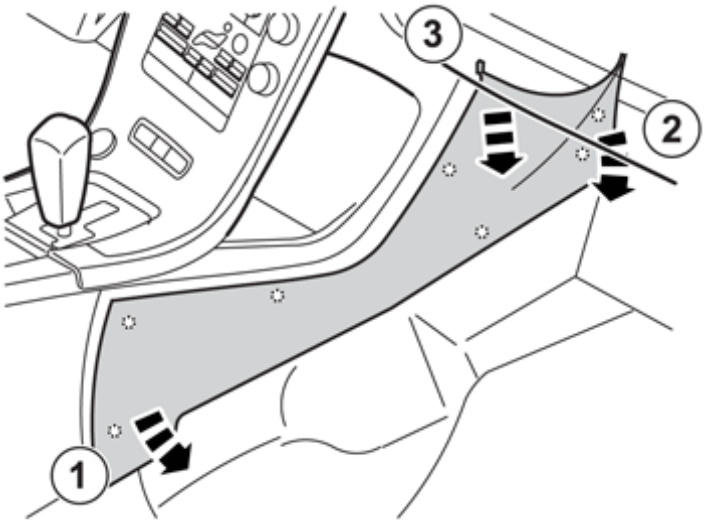

IMG-282528

2

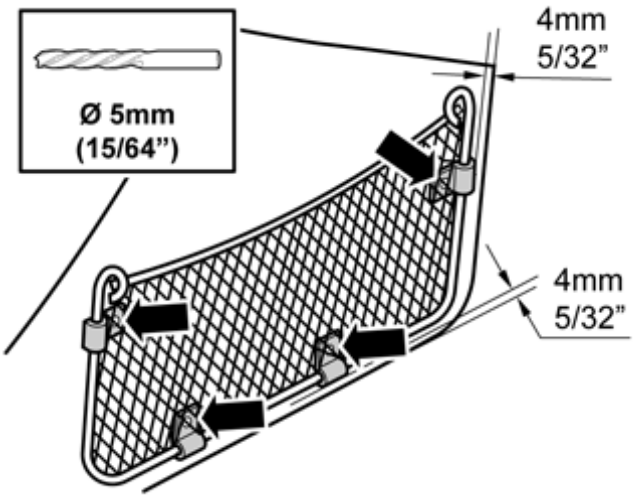

IMG-292243

Place the mesh pocket on the panel with the front edge of the clips 4 mm (5/32") from the panel's front and rear edge. Attach the mesh pocket using tape to secure it.

Note!

Take care not to damage the pocket lugs.

Drill holes through the clips and through the panel. Use a Ø5 mm (13/64") drill bit.

File down the edges of the holes.

3

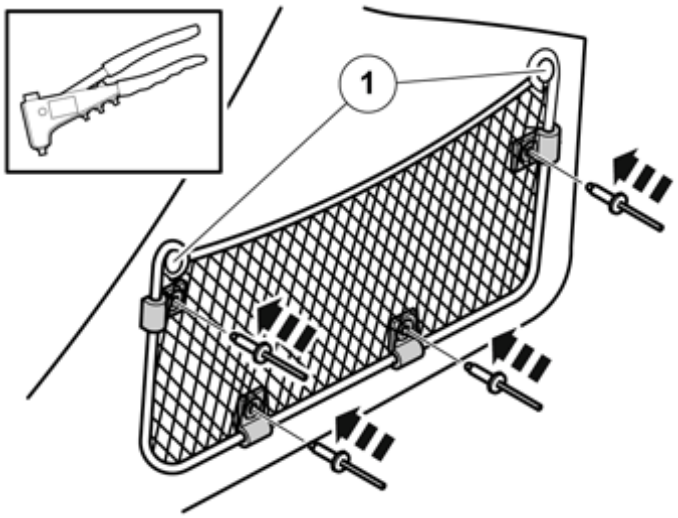

IMG-292244

Position the mesh pocket with the clips against the holes in the side panel. Turn the pocket's buttons (1) outwards.

Rivet the clips with the mesh pocket to the panel.

Note!

Ensure that the pocket is not trapped by the rivet heads.

4

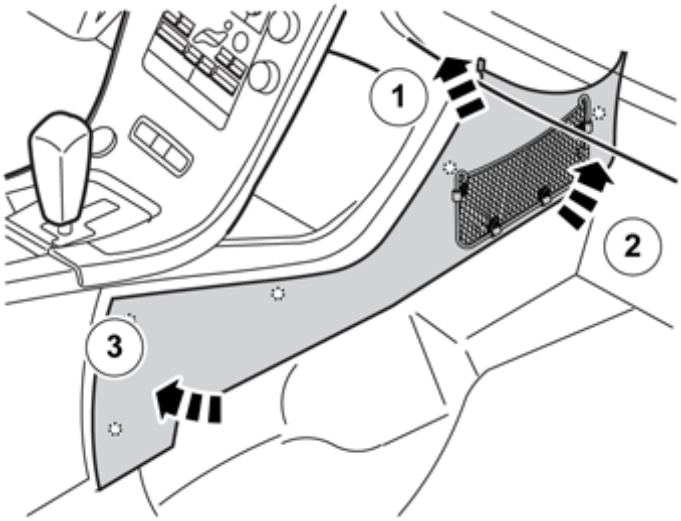

IMG-285736